GENERAL NOTES

BUILDING CODES:

A. ALL CONSTRUCTION SHALL CONFORM WITH THE 2012 INTERNATIONAL RESIDENTIAL CODE (IRC).

B. ALL CONSTRUCTION SHALL CONFORM WITH ALL APPLICABLE LOCAL CODES/AMENDMENTS.

DESIGN LOADS: (PER SECTION R301 OF IRC 2012)

A. THE DESIGN DEAD LOADS FOR ALL FRAMING IS BASED ON THE CONSTRUCTION MATERIALS SHOWN ON THE DRAWINGS AND INDICATED IN THE GENERAL NOTES.

B. THE MINIMUM DESIGN UNIFORMLY DISTRIBUTED LIVE LOADS FOR ALL NEW FRAMING SHALL BE AS FOLLOWS:

FLOOR LOAD (U.O.N.)	LL=40 PSF / DL=10 PSF
SLEEPING RMS. / ATTIC WITH FIXED STAIR	LL=30 PSF / DL=10 PSF
GARAGE FLOOR	LL=50 PSF / 2000# POINT
ROOF LIVE LOAD	MIN. 30 PSF
ATTIC AND TRUSS BOTTOM CHORD	LL=20 PSF (LIMITED STORAGE)
	LL=10 PSF (NO STORAGE)

C. ROOF SNOW LOAD DESIGN CRITERIA:

GROUND SNOW LOAD (Pg)=	25 PSF (40 PSF ELEVATIONS
EXPOSURE FACTOR (Ce)=	1
IMPORTANCE FACTOR (I)=	1

D. WIND LOAD DESIGN CRITERIA:

BASIC WIND SPEED=	90 MPH
WIND EXPOSURE=	B
IMPORTANCE FACTOR (I)=	1

E. EARTHQUAKE LOAD DESIGN CRITERIA:

SEISMIC DESIGN CATEGORY=	A
SPECTRAL RESPONSE COEFFICIENT (SDS)=	0.149
(SD1)=	0.101
SITE CLASS=	D

F. SUBJECT TO DAMAGE FROM:

WEATHERING	SEVERE
FROST LINE DEPTH	30"
TERMITE	MODERATE TO HEAVY
DECAY	SLIGHT TO MODERATE

G. TEMPERATURE AND FLOODING:

WINTER DESIGN TEMPERATURE	13° F
ICE BARRIER REQUIRED	YES
FLOOD HAZARDS	SEE FLOOD MAPS
AIR FREEZING INDEX	GREATER THAN 500
MEAN ANNUAL TEMPERATURE	55° F

H. THE STABILITY OF THE STRUCTURE IS DEPENDENT UPON THE DIAPHRAGM ACTION OF THE FLOORS AND ROOF. THE CONTRACTOR IS RESPONSIBLE FOR THE METHOD OF CONSTRUCTION AND SHALL PROVIDE ALL TEMPORARY BRACING AND SHORING REQUIRED TO MAINTAIN THE STABILITY OF THE STRUCTURE AND TO SUPPORT CONSTRUCTION LOADS DURING CONSTRUCTION, INCLUDING SOILS ON WALLS FROM BACK FILLING PRIOR TO PLACING SLABS ON GRADE. DESIGN OF ALL BRACING IS THE CONTRACTOR'S RESPONSIBILITY.

SPREAD FOOTING FOUNDATIONS:

A. THE BOTTOM OF ALL EXTERIOR FOOTINGS SHALL BE A MINIMUM OF 30" BELOW FINISH GRADE FOR FROST PROTECTION.

B. ALL FOOTINGS HAVE BEEN DESIGNED FOR AN ASSUMED NET ALLOWABLE SOIL BEARING PRESSURE OF 2000 PSF.

C. THE CONTRACTOR SHALL NOTIFY THE ENGINEER OF ALL FOUNDATION AND SOIL CONDITIONS WHICH DIFFER FROM THOSE ANTICIPATED OR INDICATED IN THE CONTRACT DOCUMENTS.

CONCRETE SLAB-ON-GRADE:

A. ALL SLABS ON GRADE, UNLESS OTHERWISE NOTED, SHALL CONSIST OF A 4 INCH THICK CONCRETE SLAB REINFORCED WITH ONE LAYER OF 6"x6"-W1.4xW1.4 WELDED WIRE FABRIC AND PLACED OVER A 6 MIL POLYETHYLENE VAPOR RETARDER AND 4 INCHES OF COMPACTED GRANULAR BASE. ALL EDGES OF VAPOR RETARDER SHALL BE LAPPED A MINIMUM OF 6 INCHES AND TAPED. MAXIMUM AGGREGATE SIZE OF GRANULAR BASE SHALL BE 1/2 INCH.

B. FILL DEPTHS UNDER SLAB SHALL NOT EXCEED 24 INCHES FOR CLEAN SAND OR GRAVEL AND 8 INCHES FOR COMPACTED SOIL. SLABS ON GREATER FILL SHALL BE ENGINEERED SUPPORTED SLABS. COORDINATE WITH ENGINEER WHERE REQUIRED.

C. PLACE CONCRETE PER ACI 302. CONTRACTOR SHALL READ, UNDERSTAND & FOLLOW GUIDELINES SET FORTH FOR PREPARING SUBGRADE, PLACING, CONSOLIDATING, FINISHING AND CURING CONCRETE SLABS.

CAST IN PLACE CONCRETE:

A. ALL CONCRETE CONSTRUCTION SHALL CONFORM TO THE "SPECIFICATIONS FOR STRUCTURAL CONCRETE FOR BUILDINGS (ACI 301)" AND TO THE "BUILDING CODE REQUIREMENTS FOR REINFORCED CONCRETE (ACI 318)".

B. IN ADDITION TO THE ABOVE, ALL CONCRETE WORK SHALL CONFORM TO THE FOLLOWING:
   1. RECOMMENDED PRACTICE FOR HOT WEATHER CONCRETING (ACI 305).
   2. RECOMMENDED PRACTICE FOR COLD WEATHER CONCRETING (ACI 306).
   3. RECOMMENDED PRACTICE FOR CONCRETE FORM WORK (ACI 347).

C. ALL CONCRETE, UNLESS OTHERWISE NOTED, SHALL BE STONE AGGREGATE CONCRETE HAVING A MINIMUM 28 DAY COMPRESSIVE STRENGTH OF 3500 PSI. ALL CONCRETE EXPOSED TO WEATHER SHALL HAVE AN AIR ENTRAINMENT OF 5%-7%. NO ADMIXTURES CONTAINING CALCIUM CHLORIDE SHALL BE PERMITTED. MAXIMUM AGGREGATE SIZE SHALL BE 1" AND MAXIMUM SLUMP SHALL BE 4" (3" FOR SLABS ON GRADE). ALL CONCRETE, EXCEPT FOOTINGS, SHALL CONTAIN A WATER REDUCING ADMIXTURE. PORTLAND CEMENT SHALL CONFORM TO ASTM C150 AND NORMAL WEIGHT AGGREGATES SHALL CONFORM TO ASTM C33.

D. ALL REINFORCING BARS SHALL BE NEW BILLET STEEL CONFORMING TO ASTM A615 GRADE 60. ALL WELDED WIRE FABRIC (W.W.F.) SHALL CONFORM TO ASTM A185. LAP ALL REINFORCING BARS A MINIMUM OF 48xBAR DIA. (EX. - LAP 1/2" BAR 24") AND ALL W.W.F. A MINIMUM OF TWO FULL GRIDS, UNLESS OTHERWISE INDICATED.

STRUCTURAL AND MISCELLANEOUS STEEL:

A. ALL STEEL CONSTRUCTION SHALL CONFORM TO THE THIRTEENTH EDITION OF THE AISC "SPECIFICATION FOR STRUCTURAL STEEL BUILDINGS - ALLOWABLE STRESS DESIGN AND PLASTIC DESIGN" AND THE AISC "CODE OF STANDARD PRACTICE FOR STEEL BUILDINGS AND BRIDGES".

B. ALL STRUCTURAL STEEL SHALL CONFORM TO ASTM A992 GRADE 50 OR ASTM A36 AT THE CONTRACTORS OPTION.

C. ALL MISCELLANEOUS STEEL (ANGLES, PLATES, ETC.) SHALL CONFORM TO ASTM A36 HAVING A MINIMUM YIELD STRENGTH OF Fy=36,000 PSI.

D. ALL STRUCTURAL STEEL PIPE SHALL CONFORM TO ASTM A501 HAVING A MINIMUM YIELD STRENGTH OF Fy=36,000 PSI OR TO ASTM A53, TYPE "E" OR "S" GRADE "B", HAVING A MINIMUM YIELD STRENGTH OF Fy=35,000 PSI.

E. ALL STRUCTURAL STEEL TUBES SHALL CONFORM TO ASTM A500, GRADE "B", HAVING A MINIMUM YIELD STRENGTH OF Fy=46,000 PSI.

F. ALL CONNECTIONS, UNLESS OTHERWISE NOTED, SHALL BE DOUBLE ANGLE OR SINGLE PLATE SHEAR CONNECTIONS DESIGNED AND DETAILED IN ACCORDANCE WITH THE AISC "STEEL CONSTRUCTION MANUAL" WITH A MINIMUM EDGE DISTANCE OF 1-1/2 INCHES AND BOLT SPACING OF 3 INCHES.

G. THE CONTRACTOR SHALL NOT SPLICE OR CUT OPENINGS IN STEEL MEMBERS NOT SHOWN ON CONTRACT DRAWINGS WITHOUT THE PERMISSION OF THE STRUCTURAL ENGINEER.

WOOD FRAMING:

A. ALL WOOD FRAMING SHALL BE FABRICATED AND ERECTED IN ACCORDANCE WITH THE "NATIONAL DESIGN SPECIFICATION FOR WOOD CONSTRUCTION" PUBLISHED BY THE NATIONAL FOREST PRODUCTS ASSOCIATION.

B. ALL NEW LUMBER SHALL BE SPRUCE-PINE-FIR NO. 2 OR BETTER. ALL NEW PRESSURE TREATED LUMBER SHALL BE SOUTHERN PINE NO. 2 OR BETTER.

C. NAILING OF ALL WOOD FRAMING SHALL MEET THE MINIMUM RECOMMENDED REQUIREMENTS PROVIDED IN THE NAILING SCHEDULE OF THE IRC BUILDING CODE.

D. PROVIDE DOUBLE JOISTS OR HEADERS ALONG EACH SIDE OF FLOOR OR ROOF OPENINGS, UNDER THE CENTERLINE OF PARTITION WALLS PARALLEL TO JOIST SPANS, AND ABOVE ALL WALL OPENINGS UNLESS OTHERWISE INDICATED.

E. THE CONTRACTOR SHALL CUT OR NOTCH THE WOOD FRAMING ONLY AS REQUIRED AND IN ACCORDANCE WITH THE IRC BUILDING CODE, THE "NATIONAL DESIGN SPECIFICATION FOR WOOD CONSTRUCTION", OR AS SHOWN ON THE CONTRACT DRAWINGS.

F. PROVIDE DOUBLE OR TRIPLE STUDS AT ALL CORNERS, SIDES OF OPENINGS, AND BENEATH ALL WOOD BEAMS AND LINTELS, UNLESS OTHERWISE INDICATED.

G. WOOD TRUSSES SHALL BE DESIGNED, FABRICATED AND ERECTED IN ACCORDANCE WITH THE TRUSS PLATE INSTITUTE'S "NATIONAL DESIGN SPECIFICATION FOR METAL PLATE CONNECTED WOOD TRUSS CONSTRUCTION" FOR THE DESIGN LOADS INDICATED ON THE CONTRACT DOCUMENTS.

H. THE CONTRACTOR SHALL SUBMIT SHOP DRAWINGS AND DESIGN CALCULATIONS FOR ALL WOOD TRUSSES INCLUDING MEMBER LAYOUT, WOOD SPECIES AND GRADE, MEMBER SIZES, TRUSS BEARING CONNECTION DETAILS, CAPACITY OF CONNECTOR PLATES AND THE SIZE AND LOCATION OF ALL REQUIRED BRIDGING. THE CALCULATIONS AND SHOP DRAWINGS SHALL BE SIGNED AND SEALED BY A PROFESSIONAL ENGINEER REGISTERED IN THE STATE OF MARYLAND.

I. THE CONTRACTOR SHALL PROVIDE TRUSS TIES EQUIVALENT TO OR BETTER THAN THE UPLIFT LOADS INDICATED ON THE TRUSS SHOP DRAWINGS.

INSULATION & MOISTURE PROTECTION:

A. PROVIDE 30 lb. BUILDING FELT OR PAPER AT BRICK VENEER WITH FLASHING AT OPENING TO PREVENT MOISTURE PENETRATION BEHIND THE VENEER.

B. PROVIDE MINIMUM ONE LAYER OF 15 lb. ROOFING FELT AT THE ROOF TO PROVIDE A WATER-RESISTANT BASE FOR FIBERGLASS COMPOSITION ROOF SHINGLES.

C. AN ICE BARRIER, IF REQUIRED, THAT CONSISTS OF TWO LAYERS OF UNDERLAYMENT CEMENTED TOGETHER OR OF A SELF-ADHERING POLYMER MODIFIED BITUMEN SHEET, SHALL BE USED IN LIEU OF NORMAL UNDERLAYMENT AND EXTEND FROM THE LOWEST EDGES OF ALL ROOF SURFACES TO A POINT AT LEAST 24 INCHES INSIDE THE EXTERIOR WALL LINE OF THE BUILDING.

D. PROVIDE INSULATION AS FOLLOWS:
   CEILINGS: R-44 FIBERGLASS BATTS OR BLOWN
   EXTERIOR FRAME WALLS: R-19 FIBERGLASS BATTS (KRAFT-FACED); R-20 MINIMUM TOTAL EXTERIOR WALL ASSEMBLY
   BASEMENT (CONCRETE) WALLS: R-10 CONTINUOUS FIBERGLASS BATTS (FOIL-FACED); R-13 FIBERGLASS BATTS (KRAFT-FACED) W/ INTERIOR FRAME WALL
   FLOORS OVER UNCONDITIONED SPACE: R-19 FIBERGLASS BATTS
   WINDOWS / GLASS DOORS: U-FACTOR ≤ 0.35
   SKYLIGHTS: U-FACTOR ≤ 0.55

E. THE CONTRACTOR SHALL PROVIDE CORROSION-RESISTANT METAL FLASHING ABOVE ALL WINDOW AND DOOR OPENINGS TO PREVENT MOISTURE PENETRATION. SIMILAR FLASHING SHALL BE PROVIDED AT ROOF VALLEYS AND ROOF OPENINGS, WOOD OR METAL COPINGS AND SILLS.

F. THE CONTRACTOR SHALL PROVIDE PERFORATED SOFFITS AT THE ROOF EAVES AND A CONTINUOUS RIDGE VENT AT THE ROOF TO PROVIDE REQUIRED ATTIC VENTILATION.

STAIRS, HANDRAILS and GUARDS:

A. STAIRS SHALL COMPLY WITH SECTION R311 OF THE IRC. STAIRWAYS SHALL NOT BE LESS THAN 36 INCHES IN CLEAR WIDTH AT ALL POINTS ABOVE THE PERMITTED HANDRAIL HEIGHT AND BELOW THE REQ'D HEADROOM HEIGHT; 31.5 INCHES WHERE A HANDRAIL IS INSTALLED ON ONE SIDE; 27 INCHES WHERE HANDRAILS ARE INSTALLED ON BOTH SIDES.

B. MINIMUM HEADROOM IN ALL PARTS OF THE STAIRWAY SHALL NOT BE LESS THAN 6 FEET 8 INCHES.

C. MAXIMUM STAIR RISER HEIGHT SHALL BE 7-3/4 INCHES AND MINIMUM TREAD DEPTH SHALL BE 10 INCHES. (UNLESS NOTED OTHERWISE IN CONTRACT DRAWINGS.)

D. HANDRAILS SHALL BE PROVIDED ON AT LEAST ONE SIDE OF EACH STAIRWAY WITH FOUR OR MORE RISERS. HANDRAILS SHALL BE A MINIMUM OF 34 INCHES AND A MAXIMUM OF 38 INCHES ABOVE TREAD NOSING.

E. PORCHES, BALCONIES, RAMPS OR RAISED FLOOR SURFACES LOCATED MORE THAN 30 INCHES ABOVE THE FLOOR OR GRADE BELOW SHALL HAVE GUARDS NOT LESS THAN 36 INCHES IN HEIGHT.

F. REQUIRED GUARDS SHALL HAVE INTERMEDIATE RAILS OR ORNAMENTAL CLOSURES WHICH DO NOT ALLOW PASSAGE OF A SPHERE 4 INCHES OR MORE IN DIAMETER.

SPECIALTIES:

A. SMOKE ALARMS SHALL COMPLY WITH SECTION R314 OF THE IRC. SMOKE ALARMS SHALL BE INSTALLED IN EACH SLEEPING ROOM AND OUTSIDE EACH SEPARATE SLEEPING AREA IN THE IMMEDIATE VICINITY OF THE BEDROOMS AND ON EACH ADDITIONAL STORY OF THE HOUSE INCLUDING THE BASEMENT.

B. SMOKE ALARMS SHALL RECEIVE THEIR PRIMARY POWER FROM THE HOUSE WIRING. WHEN PRIMARY POWER IS INTERRUPTED, SMOKE ALARMS SHALL RECEIVE POWER FROM A BATTERY.

C. CARBON MONOXIDE ALARMS SHALL COMPLY WITH SECTION R315 OF THE IRC. CARBON MONOXIDE ALARMS SHALL BE INSTALLED OUTSIDE EACH SEPARATE SLEEPING AREA IN THE IMMEDIATE VICINITY OF THE BEDROOMS.

D. CARBON MONOXIDE ALARMS ARE REQUIRED IN DWELLING UNITS WHICH HAVE FUEL-FIRED APPLIANCES OR ATTACHED GARAGES.

MECHANICAL, ELECTRICAL & PLUMBING:

A. H.V.A.C. DESIGN AND INSTALLATION TO BE PERFORMED BY LICENSED MECHANICAL CONTRACTOR IN COMPLIANCE WITH ALL APPLICABLE CODES.

B. ELECTRICAL DESIGN AND INSTALLATION TO BE PERFORMED BY LICENSED ELECTRICAL CONTRACTOR IN COMPLIANCE WITH ALL APPLICABLE CODES.

C. PLUMBING DESIGN AND INSTALLATION TO BE PERFORMED BY LICENSED PLUMBING CONTRACTOR IN COMPLIANCE WITH ALL APPLICABLE CODES.

D. IF REQUIRED, FIRE SPRINKLER SYSTEM TO BE DESIGNED AND INSTALLED BY LICENSED SPRINKLER CONTRACTOR IN COMPLIANCE WITH ALL APPLICABLE CODES.

WINDOWS AND DOORS:

A. ALL WINDOW NUMBERS INDICATE MODEL NUMBERS FOR "ANDERSEN" WINDOW UNITS.

B. WINDOWS INDICATED ON DRAWINGS AS "EGRESS" SHOULD MEET BUILDING CODE REQUIREMENTS PER SECTION R310 OF THE IRC.

C. WINDOWS IN DOORS, SIDE LIGHTS AND WINDOWS WITHIN 24" OF DOORS SHALL BE PROVIDED WITH SAFETY GLASS TO COMPLY WITH SECTION R308 OF THE IRC.

D. GLASS AT TUBS AND SHOWER ENCLOSURES SHALL BE PROVIDED WITH SAFETY GLASS TO COMPLY WITH SECTION R308 OF THE IRC.

PROJECT GENERAL NOTES:

A. WALL DIMENSIONS ARE FROM OUTSIDE FACE OF FRAMING AND ARE AS FOLLOWS (U.O.N.):

INTERIOR PARTITIONS =	3-1/2" (2x4 WOOD STUDS @ 16" O.C.)
	5-1/2" (2x6 WOOD STUDS @ 16" O.C.)
EXTERIOR WALLS =	4" (2x4 STUDS @ 16" O.C. PLUS 1/2" SHEATHING)
	6" (2x6 STUDS @ 16" O.C. PLUS 1/2" SHEATHING)

B. THE CONTRACTOR AND HIS ASSOCIATED SUBCONTRACTORS ARE RESPONSIBLE TO THOROUGHLY REVIEW ALL DRAWINGS. ANY INCONSISTENCIES OR ERRORS ARE TO BE REPORTED TO THE DESIGNER FOR CLARIFICATION OR CORRECTION PRIOR TO THE START OF CONSTRUCTION OR MANUFACTURING OF PRE-FABRICATED COMPONENTS.

C. IF THE CONTRACTOR MODIFIES OR DEVIATES FROM THESE PLANS FOR ANY REASON WITHOUT NOTIFYING CADDWORKS, INC., THE PLAN'S CODE COMPLIANCE BECOMES THE CONTRACTOR'S RESPONSIBILITY.

D. SIZING/SPACING OF ALL PRE-ENGINEERED WOOD FRAMING PRODUCTS (MICROLAMS, PARALLAMS, & FLOOR/ROOF TRUSSES) TO BE ENGINEERED/VERIFIED BY MANUFACTURER.

E. FLOOR FRAMING TO BE ACCOMPLISHED WITH PRE-ENGINEERED WOOD "I" JOISTS; MANUFACTURER'S AGENT TO DESIGN JOIST LAYOUT AND PROVIDE ENGINEERED SHOP DRAWINGS; FLOOR SYSTEM TO BE DESIGNED WITH L/480 LIVE LOAD DEFLECTION MIN. (L/600 IN AREAS TO BE FINISHED WITH TILE).

F. ROOF FRAMING TO BE ACCOMPLISHED WITH PRE-ENGINEERED WOOD TRUSSES; MANUFACTURER'S AGENT TO DESIGN TRUSS LAYOUT AND PROVIDE ENGINEERED SHOP DRAWINGS.

G. THE STAIR MANUFACTURER SHALL VERIFY EXISTING FIELD CONDITIONS PRIOR TO FABRICATION OF STAIR; STAIR TO BE BUILT IN COMPLIANCE WITH ALL APPLICABLE CODES.

H. THESE DOCUMENTS ARE NOT TO BE SCALED. DIMENSIONS SHALL GOVERN ON ALL DRAWINGS. ANY OMISSIONS OR AREAS OF DISCREPANCY SHALL BE REFERRED TO CADDWORKS, INC. PRIOR TO CONSTRUCTION.

DRAWING INDEX

GENERAL INFORMATION

G-1 GENERAL NOTES
G-2 GENERAL NOTES

ARCHITECTURAL

A-1 FOUNDATION PLAN
A-2 FIRST FLOOR PLAN
A-3 SECOND FLOOR PLAN
A-4 ROOF PLAN
A-5 FRONT ELELVATION
A-6 RIGHT SIDE ELEVATION
A-7 REAR ELEVATION
A-8 LEFT ELEVATION
A-9 TYP. WALL SECTION & SECTION "A"
A-10 SECTION @ "B"
A-11 SECTION @ "C"
A-12 SECTION @ D & SCREEN PORCH SECTION
L-1 FIRST FLOOR LATERIAL BRACING
L-2 SECOND FLOOR LATERIAL BRACING
L-3 LATERIAL BRACING DETAILS

PROPOSED NEW HOME FOR:

SCOTT / STEINHORN

5148 BONNIE ACRES
ELLICOTT CITY, HOWARD CO.

caddworks inc.
RESIDENTIAL DESIGN
332 WEST PATRICK STREET / FREDERICK, MD / 21701
(V) 301.695.9121 (E) DESIGN@CADDWORKS.NET
(F) 301.695.4868 (W) WWW.CADDWORKS.NET

© Copyright Caddworks, Inc. expressly reserves its common law copyright and other property rights in these plans. These are not to be changed or copied in any form or manner whatsoever, nor are they to be assigned to any third party, without first obtaining the expressed written permission and consent of Caddworks, Inc.

SUBMITTALS

ISSUE DATE	DRAWN BY	REMARKS
11-1-13	DMR	PRELIM.
11-4-13	DMR	REVISED ROOF PLAN
11-12-13	DMR	ADDED BILCO BASMENT DOORS
12-18-13	DMR	REVISIONS & ELEVATIONS
1-31-14	DMR	UPDATED PLANS
4-1-14	DMR	REVISED PERMIT SET

REVISED PERMIT SET 4-1-14

GENERAL NOTES

PROPOSED HOME FOR:
CAROL SCOTT & JASON STEINHORN
5148 BONNIE ACRES
ELLICOTT CITY, HOWARD COUNTY

SHEET NO.
G1

PROJ. NO.: 1279

FOUNDATION CHART

(PER SECTION R404 OF IRC 2012)

FOUNDATION WALL THICKNESS FOR THIS PROJECT IS BASED ON THE FOLLOWING CHART & MAY BE MODIFIED IN THE FIELD AS REQUIRED BY GRADE CONDITIONS USING THE SAME GUIDELINES.

MINIMUM VERTICAL REINFORCEMENT FOR 6-, 8-, 10-INCH & 12-INCH NOMINAL FLAT BASEMENT WALLS [b, c, d, e, f, h, l, k, n]

MAXIMUM WALL HEIGHT (feet)	MAXIMUM UNBALANCED BACKFILL HEIGHT [g] (feet)	MINIMUM VERTICAL REINFORCEMENT - BAR SIZE AND SPACING (INCHES)											
		SOIL CLASSES[a] AND DESIGN LATERAL SOIL (PSF PER FOOT OF DEPTH)											
		GW, GP, SW, SP 30				GM, GC, SM, SM-SC and ML 45				SC, ML-CL and Inorganic CL 60			
		MINIMUM NOMINAL WALL THICKNESS (INCHES)											
		6	8	10	12	6	8	10	12	6	8	10	12
5	4	NR	NR	NR	NR	NR	NR	NR	NR	NR	NR	NR	NR
	5	NR	NR	NR	NR	NR	NR	NR	NR	NR	NR	NR	NR
6	4	NR	NR	NR	NR	NR	NR	NR	NR	NR	NR	NR	NR
	5	NR	NR	NR	NR	NR	NR[l]	NR	NR	#4 @ 35"	NR[l]	NR	NR
	6	NR	NR	NR	NR	#5 @ 48"	NR	NR	NR	#5 @ 36"	NR	NR	NR
7	4	NR	NR	NR	NR	NR	NR	NR	NR	NR	NR	NR	NR
	5	NR	NR	NR	NR	NR	NR	NR	NR	#5 @ 47"	NR	NR	NR
	6	NR	NR	NR	NR	#5 @ 42"	NR	NR	NR	#6 @ 43"	#5 @ 48"	NR[l]	NR
	7	#5 @ 46"	NR	NR	NR	#6 @ 42"	#5 @ 46"	NR[l]	NR	#6 @ 34"	#6 @ 48"	NR	NR
8	4	NR	NR	NR	NR	NR	NR	NR	NR	NR	NR	NR	NR
	5	NR	NR	NR	NR	#4 @ 38"	NR[l]	NR	NR	#5 @ 43"	NR	NR	NR
	6	#4 @ 37"	NR[l]	NR	NR	#5 @ 37"	NR	NR	NR	#6 @ 37"	#5 @ 43"	NR[l]	NR
	7	#5 @ 40"	NR	NR	NR	#6 @ 37"	#5 @ 41"	NR[l]	NR	#6 @ 34"	#6 @ 43"	NR	NR
	8	#6 @ 43"	#5 @ 47"	NR[l]	NR	#6 @ 34"	#6 @ 43"	NR	NR	#6 @ 27"	#6 @ 32"	#6 @ 44"	NR
9	4	NR	NR	NR	NR	NR	NR	NR	NR	NR	NR	NR	NR
	5	NR	NR	NR	NR	#4 @ 35"	NR[l]	NR	NR	#5 @ 40"	NR	NR	NR
	6	#4 @ 34"	NR[l]	NR	NR	#6 @ 48"	NR	NR	NR	#6 @ 36"	#6 @ 39"	NR[l]	NR
	7	#5 @ 36"	NR	NR	NR	#6 @ 34"	#5 @ 37"	NR	NR	#6 @ 33"	#6 @ 38"	#5 @ 37"	NR[l]
	8	#6 @ 38"	#5 @ 41"	NR[l]	NR	#6 @ 33"	#6 @ 38"	#5 @ 37"	NR[l]	#6 @ 24"	#6 @ 29"	#6 @ 39"	#4 @ 48"[m]
	9	#6 @ 34"	#6 @ 46"	NR	NR	#6 @ 26"	#6 @ 30"	#6 @ 41"	NR	#6 @ 19"	#6 @ 23"	#6 @ 30"	#6 @ 39"
10	4	NR	NR	NR	NR	NR	NR	NR	NR	NR	NR	NR	NR
	5	NR	NR	NR	NR	#4 @ 33"	NR[l]	NR	NR	#5 @ 38"	NR	NR	NR
	6	#5 @ 48"	NR[l]	NR	NR	#6 @ 45"	NR	NR	NR	#6 @ 34"	#5 @ 37"	NR	NR
	7	#6 @ 47"	NR	NR	NR	#6 @ 34"	#6 @ 48"	NR	NR	#6 @ 30"	#6 @ 35"	#6 @ 48"	NR[l]
	8	#6 @ 34"	#5 @ 38"	NR	NR	#6 @ 30"	#6 @ 34"	#6 @ 47"	NR[l]	#6 @ 22"	#6 @ 26"	#6 @ 35"	#6 @ 45"[m]
	9	#6 @ 34"	#6 @ 41"	#4 @ 48"	NR[l]	#6 @ 23"	#6 @ 27"	#6 @ 35"	#4 @ 48"[m]	DR	#6 @ 22"	#6 @ 27"	#6 @ 34"
	10	#6 @ 28"	#6 @ 33"	#6 @ 45"	NR	DR[j]	#6 @ 23"	#6 @ 29"	#6 @ 38"	DR	#6 @ 22"	#6 @ 22"	#6 @ 28"

NOTES:
a. SOIL CLASSES ARE IN ACCORDANCE WITH THE "UNIFIED SOIL CLASSIFICATION SYSTEM". REFER TO TABLE R405.1 OF IRC 2012.
b. TABLE VALUES ARE BASED ON REINFORCING BARS WITH A MINIMUM YIELD STRENGTH OF 60,000 PSI.
c. VERTICAL REINFORCEMENT WITH A YIELD STRENGTH OF LESS THAN 60,000 PSI AND/OR BARS OF A DIFFERENT SIZE THAN SPECIFIED IN THE TABLE ARE PERMITTED IN ACCORDANCE WITH SECTION R404.1.2.3.7.6 AND TABLE R404.1.2(9) OF IRC 2012.
d. NR - INDICATES NO VERTICAL WALL REINFORCEMENT IS REQUIRED, EXCEPT FOR 6-INCH NOMINAL WALLS FORMED WITH STAY-IN-PLACE FORMING SYSTEMS IN WHICH CASE VERTICAL REINFORCEMENT SHALL BE #4 @ 48" ON CENTER.
e. ALLOWABLE DEFLECTION CRITERION IS L/240, WHERE L IS THE UNSUPPORTED HEIGHT OF THE BASEMENT WALL IN INCHES.
f. INTERPOLATION IS NOT PERMITTED.
g. WHERE WALLS WILL RETAIN 4 FEET OR MORE OF UNBALANCED BACKFILL, THEY SHALL BE LATERALLY SUPPORTED AT THE TOP AND BOTTOM BEFORE BACKFILLING.
h. VERTICAL REINFORCEMENT SHALL BE LOCATED TO PROVIDE A COVER OF 1.25 INCHES MEASURED FROM THE INSIDE FACE OF THE WALL. THE CENTER OF THE STEEL SHALL NOT VARY FROM THE SPECIFIED LOCATION BY MORE THAN THE GREATER OF 10 PERCENT OF THE WALL THICKNESS OR 3/8-INCH.
i. CONCRETE COVER FOR REINFORCEMENT MEASURED FROM THE INSIDE FACE OF THE WALL SHALL NOT BE LESS THAN 3/4-INCH. CONCRETE COVER FOR REINFORCEMENT MEASURED FROM THE OUTSIDE FACE OF THE WALL SHALL NOT BE LESS THAN 1 1/2-INCHES FOR #5 BARS AND SMALLER, AND NOT LESS THAN 2 INCHES FOR LARGER BARS.
j. DR - MEANS DESIGN IS REQUIRED IN ACCORDANCE WITH THE APPLICABLE BUILDING CODE, OR WHERE THERE IS NO CODE IN ACCORDANCE WITH ACI 318.
k. CONCRETE SHALL HAVE A SPECIFIED COMPRESSICE STRENGTH, f'_c, OF NOT LESS THAN 2,500 PSI AT 28 DAYS, UNLESS A HIGHER STRENGTH IS REQUIRED BY FOOTNOTE 1 OR m.
l. THE MINIMUM THICKNESS IS PERMITTED TO BE REDUCED 2 INCHES, PROVIDED THE MINIMUM SPECIFIED COMPRESSIVE STRENGTH OF CONCRETE, f'_c, IS 4,000 PSI.
m. A PLAIN CONCRETE WALL WITH A MINIMUM NOMINAL THICKNESS OF 12 INCHES IS PERMITTED, PROVIDED MINIMUM SPECIFIED COMPRESSIVE STRENGTH OF CONCRETE, f'_c, IS 3,500 PSI.
n. SEE TABLE R611.3 OF IRC 2012 FOR TOLERANCE FROM NOMINAL THICKNESS PERMITTED FOR FLAT WALLS.

HEADER SPAN CHART [a, b]

(PER SECTION R502 OF IRC 2012)

GIRDER SPANS[a] AND HEADER SPANS[a] FOR EXTERIOR BEARING WALLS

GIRDERS & HEADERS SUPPORTING	SIZE	GROUND SNOW LOAD (PSF)[e]																	
		30						50						70					
		BUILDING WIDTH[c] (feet)																	
		20		28		36		20		28		36		20		28		36	
		SPAN	NJ[d]	SPAN	NJ[d]	SPAN	NJ[d]	SPAN	NJ[d]	SPAN	NJ[d]	SPAN	NJ[d]	SPAN	NJ[d]	SPAN	NJ[d]	SPAN	NJ[d]
ROOF AND CEILING	(2) 2x8	6-10	1	5-11	2	5-4	2	5-11	2	5-2	2	4-7	2	5-4	2	4-7	2	4-1	2
	(2) 2x10	8-5	2	7-3	2	6-6	2	7-3	2	6-3	2	5-7	2	6-6	2	5-7	2	5-0	2
	(2) 2x12	9-9	2	8-5	2	7-6	2	8-5	2	7-3	2	6-6	2	7-6	2	6-6	2	5-10	3
	(3) 2x8	8-4	1	7-5	1	6-8	1	7-5	1	6-5	2	5-9	2	6-8	1	5-9	2	5-2	2
	(3) 2x10	10-6	1	9-1	2	8-2	2	9-1	2	7-10	2	7-0	2	8-2	2	7-0	2	6-4	2
	(3) 2x12	12-2	2	10-7	2	9-5	2	10-7	2	9-2	2	8-2	2	9-5	2	8-2	2	7-4	2
ROOF, CEILING AND ONE CENTER- BEARING FLOOR	(2) 2x8	5-9	2	5-0	2	4-6	2	5-2	2	4-6	2	4-1	2	4-9	2	4-2	2	3-9	2
	(2) 2x10	7-0	2	6-2	2	5-6	2	6-4	2	5-6	2	5-0	2	5-9	2	5-1	2	4-7	3
	(2) 2x12	8-1	2	7-1	2	6-5	2	7-4	2	6-5	2	5-9	3	6-8	2	5-10	3	5-3	3
	(3) 2x8	7-2	1	6-3	2	5-8	2	6-5	2	5-8	2	5-1	2	5-11	2	5-2	2	4-8	2
	(3) 2x10	8-9	2	7-8	2	6-11	2	7-11	2	6-11	2	6-3	2	7-3	2	6-4	2	5-8	2
	(3) 2x12	10-2	2	8-11	2	8-0	2	9-2	2	8-0	2	7-3	2	8-5	2	7-4	2	6-7	2
ROOF, CEILING AND ONE CLEAR SPAN FLOOR	(2) 2x8	5-0	2	4-4	2	3-10	2	4-10	2	4-2	2	3-9	2	4-6	2	3-11	2	3-6	2
	(2) 2x10	6-1	2	5-3	2	4-8	2	5-11	2	5-1	2	4-7	3	5-6	2	4-9	2	4-3	3
	(2) 2x12	7-1	2	6-1	3	5-5	3	6-10	2	5-11	3	5-4	3	6-4	2	5-6	3	5-0	3
	(3) 2x8	6-3	2	5-5	2	4-10	2	6-1	2	5-3	2	4-8	2	5-7	2	4-11	2	4-5	2
	(3) 2x10	7-7	2	6-7	2	5-11	2	7-5	2	6-5	2	5-9	2	6-10	2	6-0	2	5-4	2
	(3) 2x12	8-10	2	7-8	2	6-10	2	8-7	2	7-5	2	6-8	2	7-11	2	6-11	2	6-3	2
ROOF, CEILING AND TWO CENTER-BEARING FLOORS	(2) 2x8	4-9	2	4-2	2	3-9	2	4-7	2	4-0	2	3-8	2	4-4	2	3-9	2	3-5	2
	(2) 2x10	5-9	2	5-1	2	4-7	3	5-8	2	4-11	2	4-5	3	5-3	2	4-7	3	4-2	3
	(2) 2x12	6-8	2	5-10	3	5-3	3	6-6	2	5-9	3	5-2	3	6-1	3	5-4	3	4-10	3
	(3) 2x8	5-11	2	5-2	2	4-8	2	5-9	2	5-1	2	4-7	2	5-5	2	4-9	2	4-3	2
	(3) 2x10	7-3	2	6-4	2	5-8	2	7-1	2	6-2	2	5-7	2	6-7	2	5-9	2	5-3	2
	(3) 2x12	8-5	2	7-4	2	6-7	2	8-2	2	7-2	2	6-5	3	7-8	2	6-9	2	6-1	3
ROOF, CEILING AND TWO CLEAR SPAN FLOORS	(2) 2x8	3-10	2	3-4	2	3-0	3	3-10	2	3-4	2	2-11	3	3-9	2	3-3	2	2-11	3
	(2) 2x10	4-9	2	4-1	3	3-8	3	4-8	2	4-0	3	3-7	3	4-7	3	4-0	3	3-6	3
	(2) 2x12	5-6	3	4-9	3	4-3	3	5-5	3	4-8	3	4-2	3	5-4	3	4-7	3	4-1	4
	(3) 2x8	4-10	2	4-2	2	3-9	2	4-9	2	4-1	2	3-8	2	4-8	2	4-1	2	3-8	2
	(3) 2x10	5-11	2	5-1	2	4-7	3	5-10	2	5-0	2	4-6	3	5-9	2	4-11	2	4-5	3
	(3) 2x12	6-10	2	5-11	3	5-4	3	6-9	2	5-10	3	5-3	3	6-8	2	5-9	3	5-2	3

NOTES:
a. SPANS ARE GIVEN IN FEET AND INCHES.
b. TABULATED VALUES ASSUME #2 GRADE DOUGLAS FIR-LARCH, HEM-FIR, SOUTHERN PINE, OR SPRUCE-PINE-FIR LUMBER.
c. BUILDING WIDTH IS MEASURED PERPENDICULAR TO THE RIDGE. FOR WIDTHS BETWEEN THOSE SHOWN, SPANS ARE PERMITTED TO BE INTERPOLATED.
d. NJ - NUMBER OF JACK STUDS REQUIRED TO SUPPORT EACH END. WHERE THE NUMBER OF REQUIRED JACK STUDS EQUALS ONE, THE HEADER IS PERMITTED TO BE SUPPORTED BY AN APPROVED FRAMING ANCHOR ATTACHED TO THE FULL-HEIGHT WALL STUD AND TO THE HEADER.
e. USE 30 PSF GROUND SNOW LOAD FOR CASES IN WHICH GROUND SNOW LOAD IS LESS THAN 30 PSF AND THE ROOF LIVE LOAD IS EQUAL TO OR LESS THAN 20 PSF.

ALLOWABLE SPANS FOR LINTELS SUPPORTING MASONRY VENEER [a, b, c, d]

(PER SECTION R703 OF IRC 2012)

SIZE OF STEEL ANGLE [a, c, d] (INCHES)	NO STORY ABOVE	ONE STORY ABOVE	TWO STORIES ABOVE	NUMBER OF 1/2" OR EQUIV. REINF. BARS IN REINF. LINTEL[b, d]
3 x 3 x 1/4	6'-0"	4'-6"	3'-0"	1
4 x 3 x 1/4	8'-0"	6'-0"	4'-6"	1
5 x 3-1/2 x 5/16	10'-0"	8'-0"	6'-0"	2
6 x 3-1/2 x 5/16	14'-0"	9'-6"	7'-0"	2
(2) 6 x 3-1/2 x 5/16	20'-0"	12'-0"	9'-6"	4

NOTES:
a. LONG LEG OF THE ANGLE SHALL BE PLACED IN A VERTICAL POSITION.
b. DEPTH OF REINFORCED LINTELS SHALL NOT BE LESS THAN 8 INCHES AND ALL CELLS OF HOLLOW MASONRY LINTELS SHALL BE GROUTED SOLID. REINFORCING BARS SHALL EXTEND NOT LESS THAN 8 INCHES INTO THE SUPPORT.
c. STEEL MEMBERS INDICATED ARE ADEQUATE TYPICAL EXAMPLES; OTHER STEEL MEMBERS MEETING STRUCTURAL DESIGN REQUIREMENTS MAY BE USED.
d. EITHER STEEL ANGLE OR REINFORCED LINTEL SHALL SPAN OPENING.

HEADER SPAN CHART [a, b]

(PER SECTION R502 OF IRC 2012)

GIRDER SPANS[a] AND HEADER SPANS[a] FOR INTERIOR BEARING WALLS

HEADERS & GIRDERS SUPPORTING	SIZE	BUILDING WIDTH[c] (feet)					
		20		28		36	
		SPAN	NJ[d]	SPAN	NJ[d]	SPAN	NJ[d]
ONE FLOOR ONLY	(2) 2x6	4-6	1	3-11	1	3-6	1
	(2) 2x8	5-9	1	5-0	2	4-5	2
	(2) 2x10	7-0	2	6-1	2	5-5	2
	(2) 2x12	8-1	2	7-0	2	6-3	2
	(3) 2x8	7-2	1	6-3	1	5-7	2
	(3) 2x10	8-9	1	7-7	2	6-9	2
	(3) 2x12	10-2	2	8-10	2	7-10	2
TWO FLOORS	(2) 2x6	3-2	2	2-9	2	2-5	2
	(2) 2x8	4-1	2	3-6	2	3-2	2
	(2) 2x10	4-11	2	4-3	2	3-10	3
	(2) 2x12	5-9	2	5-0	3	4-5	3
	(3) 2x8	5-1	2	4-5	2	3-11	2
	(3) 2x10	6-2	2	5-4	2	4-10	2
	(3) 2x12	7-2	2	6-3	2	5-7	3

NOTES:
a. SPANS ARE GIVEN IN FEET AND INCHES.
b. TABULATED VALUES ASSUME #2 GRADE DOUGLAS FIR-LARCH, HEM-FIR, SOUTHERN PINE, OR SPRUCE-PINE-FIR LUMBER.
c. BUILDING WIDTH IS MEASURED PERPENDICULAR TO THE RIDGE. FOR WIDTHS BETWEEN THOSE SHOWN, SPANS ARE PERMITTED TO BE INTERPOLATED.
d. NJ - NUMBER OF JACK STUDS REQUIRED TO SUPPORT EACH END. WHERE THE NUMBER OF REQUIRED JACK STUDS EQUALS ONE, THE HEADER IS PERMITTED TO BE SUPPORTED BY AN APPROVED FRAMING ANCHOR ATTACHED TO THE FULL-HEIGHT WALL STUD AND TO THE HEADER.

REVISED PERMIT SET 4-1-14

caddworks inc.
RESIDENTIAL DESIGN
332 WEST PATRICK STREET / FREDERICK, MD / 21701
(V) 301.695.9121 (E) DESIGN@CADDWORKS.NET
(F) 301.695.4868 (W) WWW.CADDWORKS.NET

© Copyright Caddworks, Inc. expressly reserves its common law copyright and other property rights in these plans. These are not to be reproduced, changed or copied in any form or manner whatsoever, nor are they to be assigned to any third party, without first obtaining the expressed written permission and consent of Caddworks, Inc.

SUBMITTALS

ISSUE DATE	DRAWN BY	REMARKS
11-1-13	DMR	PRELIM.
11-4-13	DMR	REVISED ROOF PLAN
11-12-13	DMR	ADDED BILCO BASMENT DOORS
12-13-13	DMR	REVISIONS & ELEVATIONS
1-31-14	DMR	UPDATED PLANS
4-1-14	DMR	REVISED PERMIT SET

IRC TABLES

PROPOSED HOME FOR:
CAROL SCOTT & JASON STEINHORN
5148 BONNIE ACRES
ELLICOTT CITY, HOWARD COUNTY

SHEET NO.
G2

PROJ. NO.: 1279

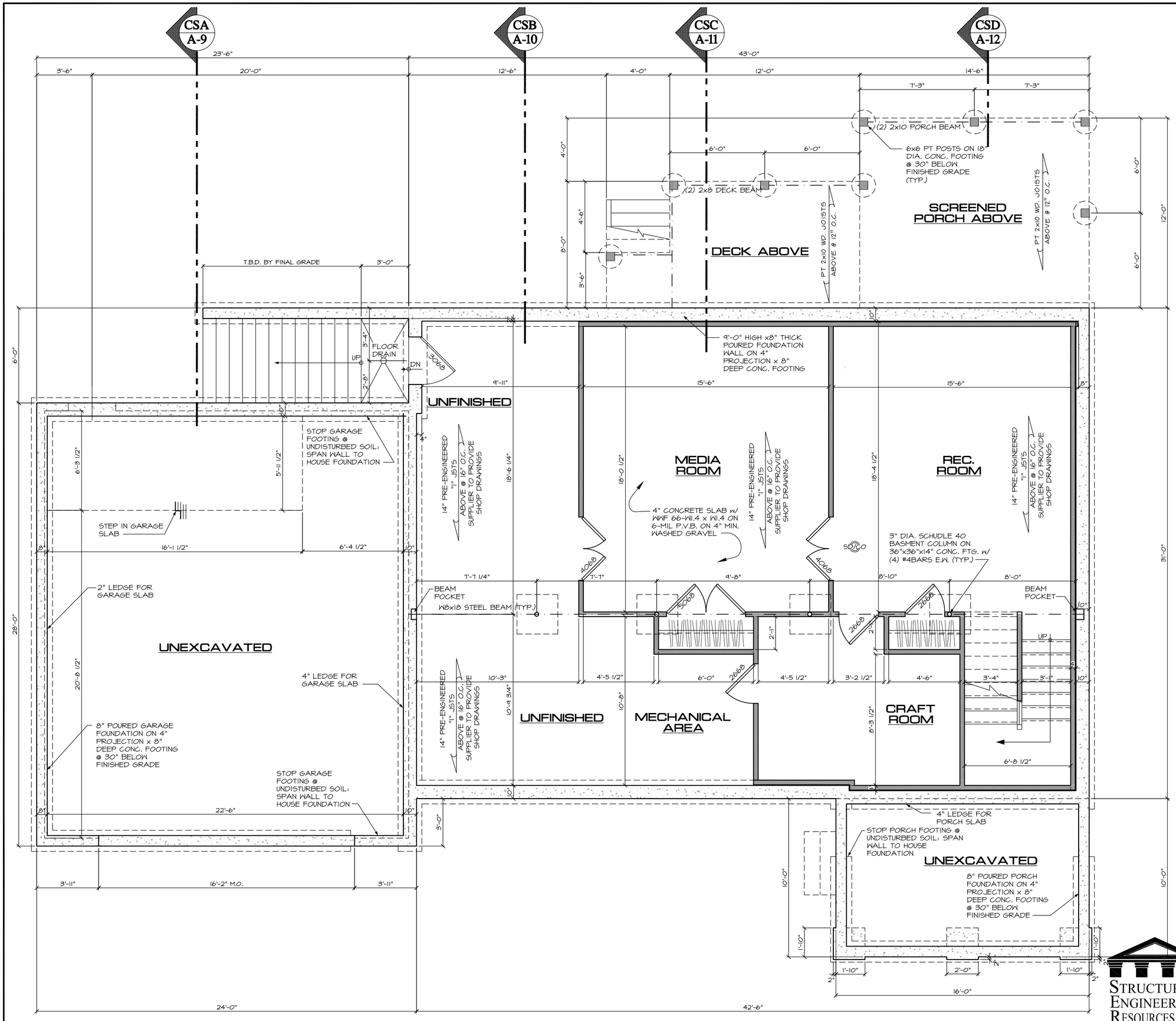

FOUNDATION PLAN

708 SQ. FT. FINISHED BSMT. SCALE: 1/4"=1'-0"

REVISED PERMIT SET 4-1-14

STRUCTURAL ENGINEERING RESOURCES, LLC
26 NORTH FOURTH STREET
GETTYSBURG, PA 17325
(717) 337-1335
www.SERLLC.us

STATE OF MARYLAND — STRENGTH BEYOND STRENGTH — PROFESSIONAL ENGINEER — No. 24342

Professional Certification. I hereby certify that these documents were prepared or approved by me, and that I am a duly licensed professional engineer under the laws of the State of Maryland, License No. 24342, Expiration Date: 11-17-2015.

caddworks inc.
RESIDENTIAL DESIGN
332 WEST PATRICK STREET / FREDERICK, MD / 21701
(V) 301.695.9121 (E) DESIGN@CADDWORKS.NET
(F) 301.695.4868 (W) WWW.CADDWORKS.NET

© Copyright Caddworks, Inc. expressly reserves its common law copyright and other property rights in these plans. These are not to be reproduced, changed or copied in any form or manner whatsoever, nor are they to be assigned to any third party, without first obtaining the expressed written permission and consent of Caddworks, Inc.

SUBMITTALS

ISSUE DATE	DRAWN BY	REMARKS
11-1-13	DMR	PRELIM.
11-4-13	DMR	REVISED ROOF PLAN
11-12-13	DMR	ADDED BILCO BASEMENT DOORS
12-13-13	DMR	REVISIONS & ELEVATIONS
1-31-14	DMR	UPDATED PLANS
4-1-14	DMR	REVISED PERMIT SET

FOUNDATION PLAN

PROPOSED HOME FOR:

CAROL SCOTT & JASON STEINHORN

5148 BONNIE ACRES

ELLICOTT CITY, HOWARD COUNTY

SHEET NO.

A-1

PROJ. NO.: 1279

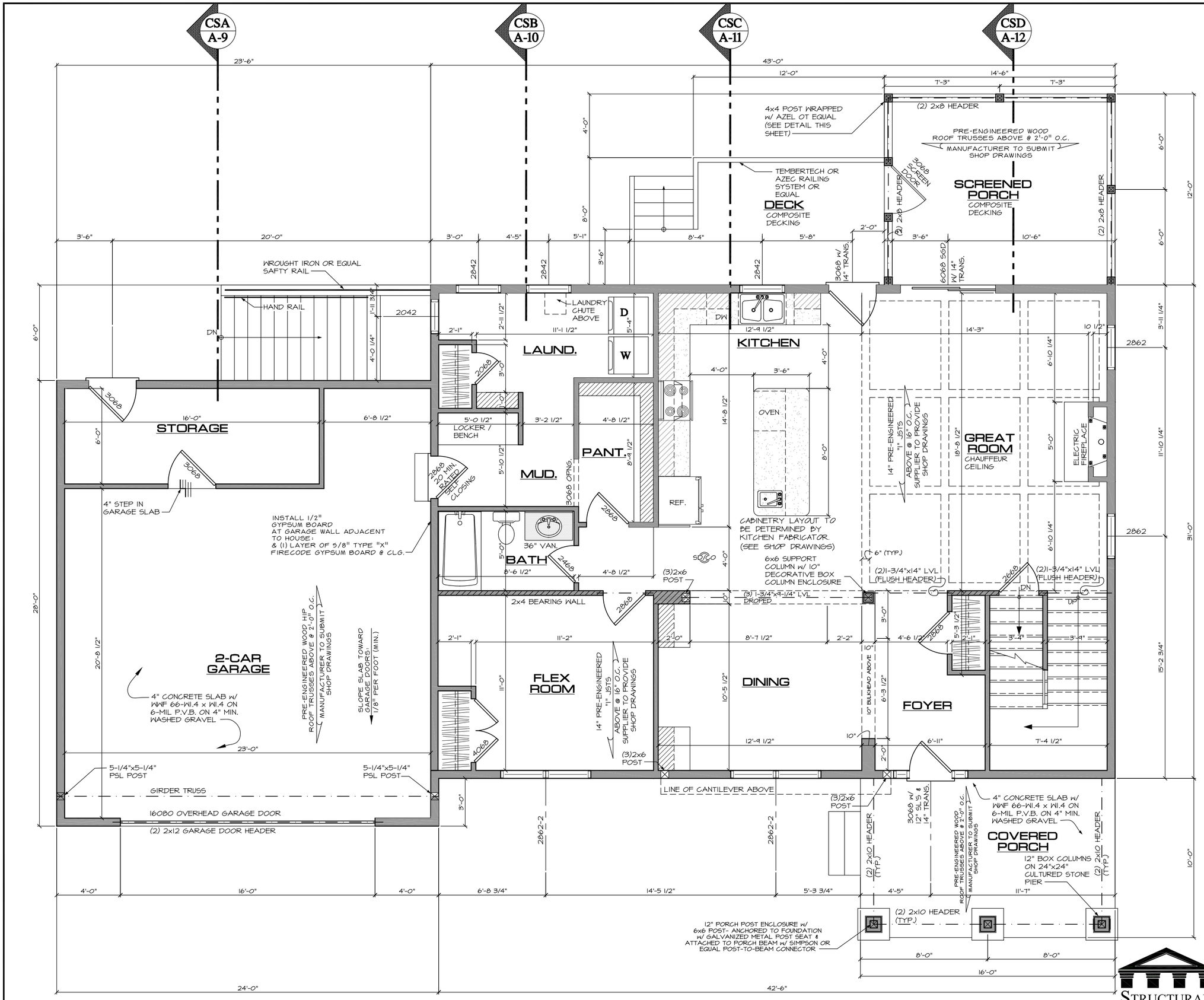

FIRST FLOOR PLAN

1333 SQ. FT 2ND FLOOR SCALE: 1/4"=1'-0"

caddworks inc.
RESIDENTIAL DESIGN
332 WEST PATRICK STREET / FREDERICK, MD / 21701
(V) 301.695.9121 (E) DESIGN@CADDWORKS.NET
(F) 301.695.4868 (W) WWW.CADDWORKS.NET

© Copyright Caddworks, Inc. expressly reserves its common law copyright and other property rights in these plans. These are not to be reproduced, changed or copied in any form or manner whatsoever, nor are they to be assigned to any third party, without first obtaining the expressed written permission and consent of Caddworks, Inc.

SUBMITTALS

ISSUE DATE	DRAWN BY	REMARKS
11-1-13	DMR	PRELIM.
11-4-13	DMR	REVISED ROOF PLAN
11-12-13	DMR	ADDED BILCO BASEMENT DOORS
12-13-13	DMR	REVISIONS & ELEVATIONS
1-31-14	DMR	UPDATED PLANS
4-1-14	DMR	REVISED PERMIT SET

REVISED PERMIT SET 4-1-14

FIRST FLOOR PLAN

PROPOSED HOME FOR:

CAROL SCOTT & JASON STEINHORN

5148 BONNIE ACRES

ELLICOTT CITY, HOWARD COUNTY

STRUCTURAL ENGINEERING RESOURCES, LLC
26 NORTH FOURTH STREET
GETTYSBURG, PA 17325
(717) 337-1335
www.SERLLC.us

STATE OF MARYLAND PROFESSIONAL ENGINEER No. 24343

Professional Certification. I hereby certify that these documents were prepared or approved by me, and that I am a duly licensed professional engineer under the laws of the State of Maryland, License No. 24343, Expiration Date: 11-17-2015.

SHEET NO.

A-2

PROJ. NO.: 1279

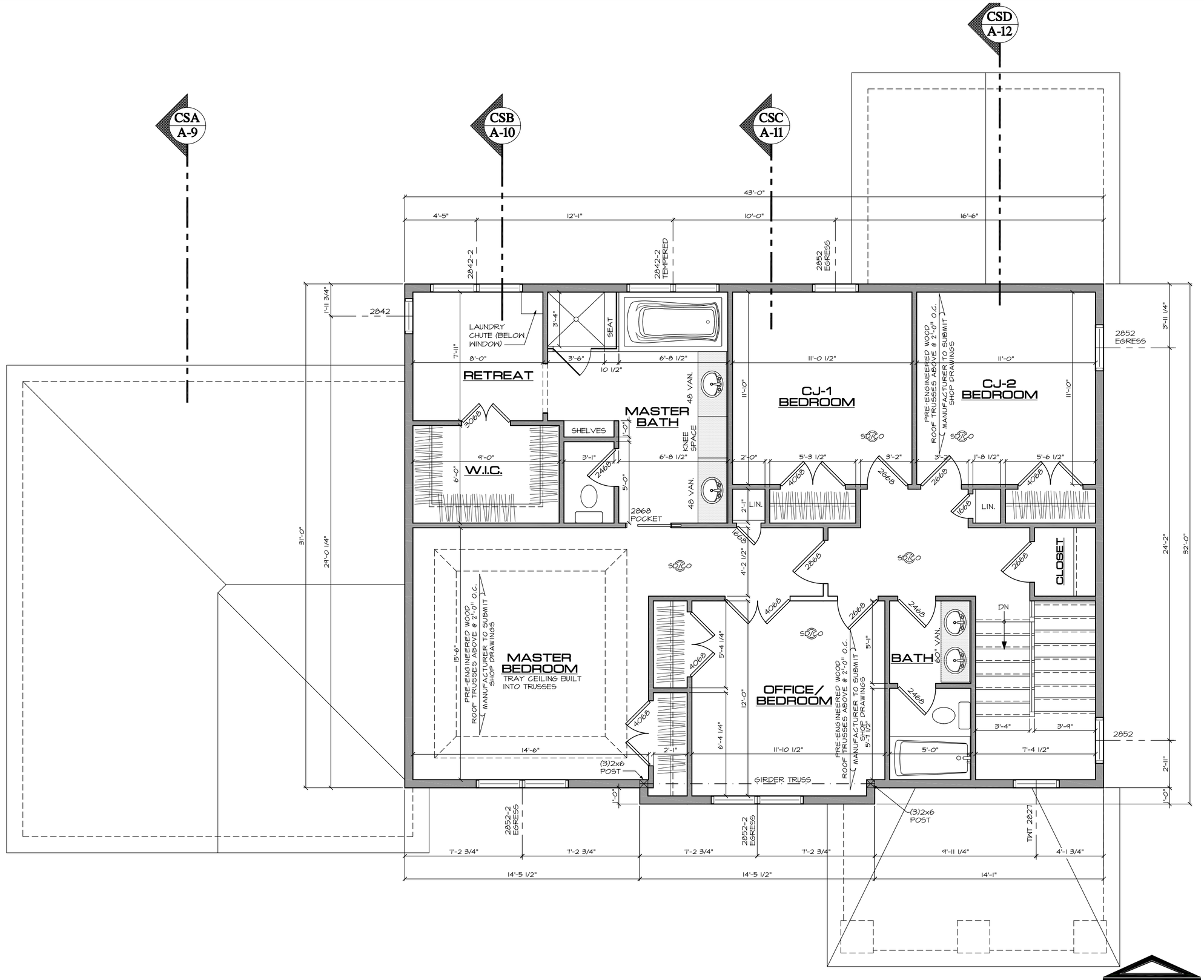

SECOND FLOOR PLAN

1262 SQ. FT 2ND FLOOR SCALE: 1/4"=1'-0"

STRUCTURAL ENGINEERING RESOURCES, LLC
26 NORTH FOURTH STREET
GETTYSBURG, PA 17325
(717) 337-1335
www.SERLLC.us

STATE OF MARYLAND — THEREFORE BUT THEREFORE — PROFESSIONAL ENGINEER — NO. 24342

Professional Certification. I hereby certify that these documents were prepared or approved by me, and that I am a duly licensed professional engineer under the laws of the State of Maryland. License No. 24342, Expiration Date: 11-17-2015.

REVISED PERMIT SET 4-1-14

caddworks inc.
RESIDENTIAL DESIGN
332 WEST PATRICK STREET / FREDERICK, MD / 21701
(V) 301.695.9121 (E) DESIGN@CADDWORKS.NET
(F) 301.695.4868 (W) WWW.CADDWORKS.NET

© Copyright Caddworks, Inc. expressly reserves its common law copyright and other property rights in these plans. These are not to be reproduced, changed or copied in any form or manner whatsoever, nor are they to be assigned to any third party, without first obtaining the expressed written permission and consent of Caddworks, Inc.

SUBMITTALS

ISSUE DATE	DRAWN BY	REMARKS
11-1-13	DMR	PRELIM.
11-4-13	DMR	REVISED ROOF PLAN
11-12-13	DMR	ADDED BILCO BASEMENT DOORS
12-13-13	DMR	REVISIONS & ELEVATIONS
1-31-14	DMR	UPDATED PLANS
4-1-14	DMR	REVISED PERMIT SET

SECOND FLOOR PLAN

PROPOSED HOME FOR:

CAROL SCOTT & JASON STEINHORN

5148 BONNIE ACRES
ELLICOTT CITY, HOWARD COUNTY

SHEET NO.
A-3

PROJ. NO.: 1279

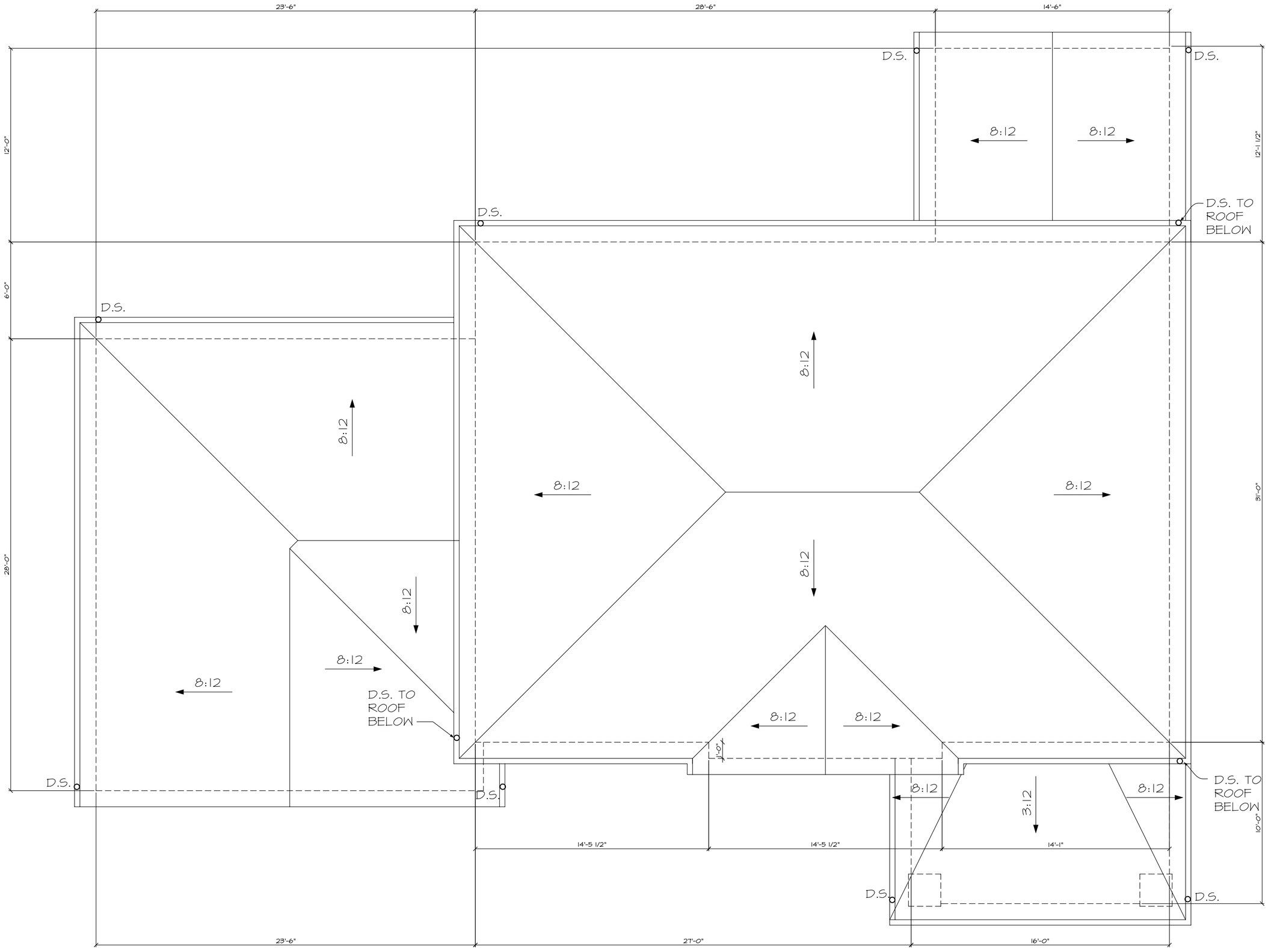

ROOF PLAN

SCALE: 1/4"=1'-0"

REVISED PERMIT SET 4-1-14

caddworks inc.

RESIDENTIAL DESIGN

332 WEST PATRICK STREET / FREDERICK, MD / 21701
(V) 301.695.9121 (E) DESIGN@CADDWORKS.NET
(F) 301.695.4868 (W) WWW.CADDWORKS.NET

© Copyright Caddworks, Inc. expressly reserves its common law copyright and other property rights in these plans. These are not to be reproduced, changed or copied in any form or manner whatsoever, nor are they to be assigned to any third party, without first obtaining the expressed written permission and consent of Caddworks, Inc.

SUBMITTALS

ISSUE DATE	DRAWN BY	REMARKS
11-1-13	DMR	PRELIM.
11-4-13	DMR	REVISED ROOF PLAN
11-12-13	DMR	ADDED BILCO BASEMENT DOORS
12-13-13	DMR	REVISIONS & ELEVATIONS
1-31-14	DMR	UPDATED PLANS
4-1-14	DMR	REVISED PERMIT SET

ROOF PLAN

PROPOSED HOME FOR:

CAROL SCOTT & JASON STEINHORN

5148 BONNIE ACRES
ELLICOTT CITY, HOWARD COUNTY

SHEET NO.
A-4

PROJ. NO.: 1279

FRONT ELEVATION

SCALE: 1/4"=1'-0"

REVISED PERMIT SET 4-1-14

caddworks inc.

RESIDENTIAL DESIGN

332 WEST PATRICK STREET / FREDERICK, MD / 21701
(V) 301.695.9121 (E) DESIGN@CADDWORKS.NET
(F) 301.695.4868 (W) WWW.CADDWORKS.NET

© Copyright Caddworks, Inc. expressly reserves its common law copyright and other property rights in these plans. These are not to be reproduced, changed or copied in any form or manner whatsoever, nor are they to be assigned to any third party, without first obtaining the expressed written permission and consent of Caddworks, Inc.

SUBMITTALS

ISSUE DATE	DRAWN BY	REMARKS
11-1-13	DMR	PRELIM.
11-4-13	DMR	REVISED ROOF PLAN
11-12-13	DMR	ADDED BILCO BASMENT DOORS
12-13-13	DMR	REVISIONS & ELEVATIONS
1-31-14	DMR	UPDATED PLANS
4-1-14	DMR	REVISED PERMIT SET

FRONT ELEVATION

PROPOSED HOME FOR:

CAROL SCOTT & JASON STEINHORN

5148 BONNIE ACRES
ELLICOTT CITY, HOWARD COUNTY

SHEET NO.
A-5

PROJ. NO.: 1279

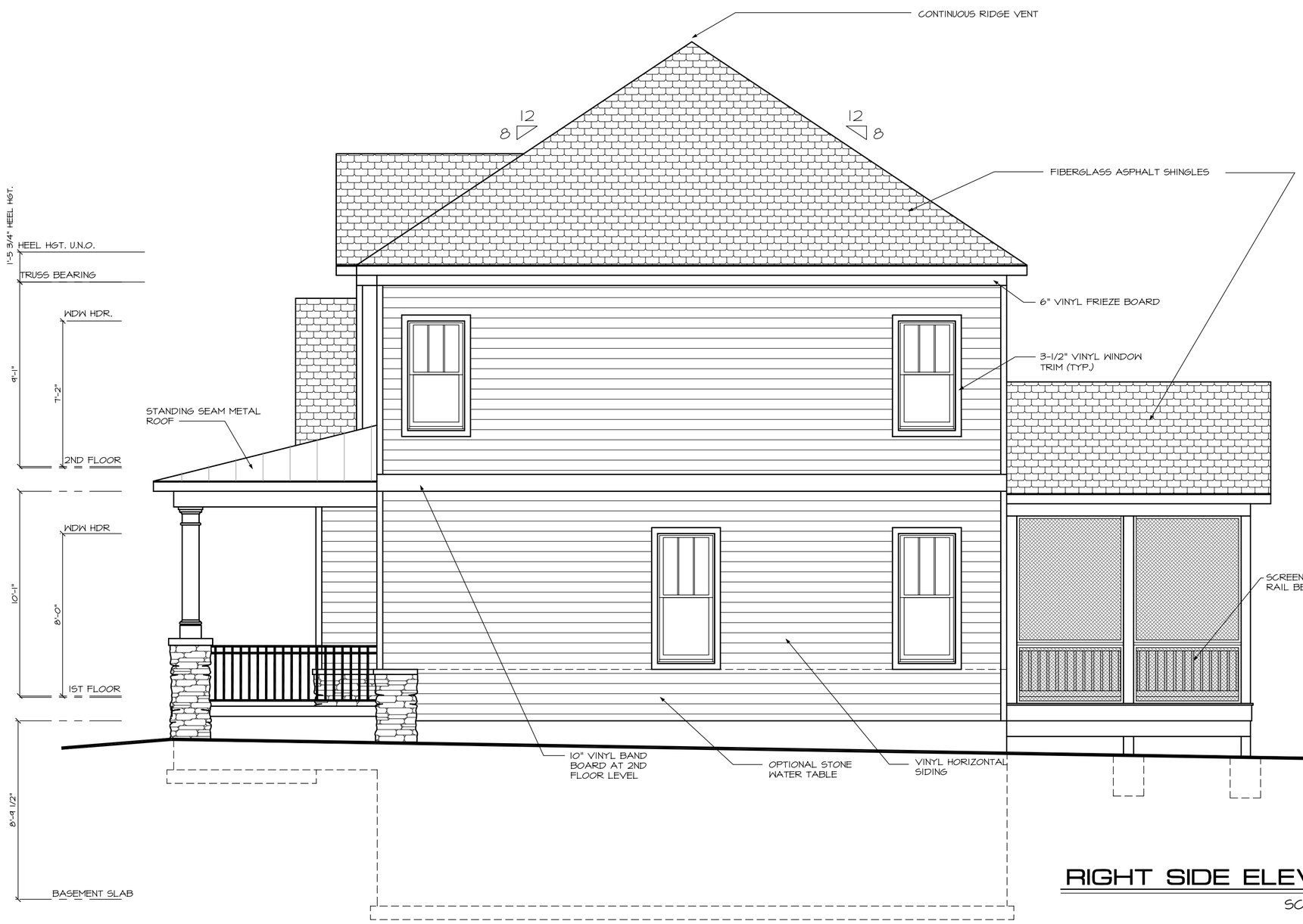

RIGHT SIDE ELEVATION

SCALE: 1/4"=1'-0"

REVISED PERMIT SET 4-1-14

caddworks inc.
RESIDENTIAL DESIGN
332 WEST PATRICK STREET / FREDERICK, MD / 21701
(V) 301.695.9121 (E) DESIGN@CADDWORKS.NET
(F) 301.695.4868 (W) WWW.CADDWORKS.NET

© Copyright Caddworks, Inc. expressly reserves its common law copyright and other property rights in these plans. These are not to be reproduced, changed or copied in any form or manner whatsoever, nor are they to be assigned to any third party, without first obtaining the expressed written permission and consent of Caddworks, Inc.

SUBMITTALS

ISSUE DATE	DRAWN BY	REMARKS
11-1-13	DMR	PRELIM.
11-4-13	DMR	REVISED ROOF PLAN
11-12-13	DMR	ADDED BILCO BASEMENT DOORS
12-13-13	DMR	REVISIONS & ELEVATIONS
1-31-14	DMR	UPDATED PLANS
4-1-14	DMR	REVISED PERMIT SET

RIGHT SIDE ELEVATION

PROPOSED HOME FOR:
CAROL SCOTT & JASON STEINHORN
5148 BONNIE ACRES
ELLICOTT CITY, HOWARD COUNTY

SHEET NO.
A-6

PROJ. NO.: 1279

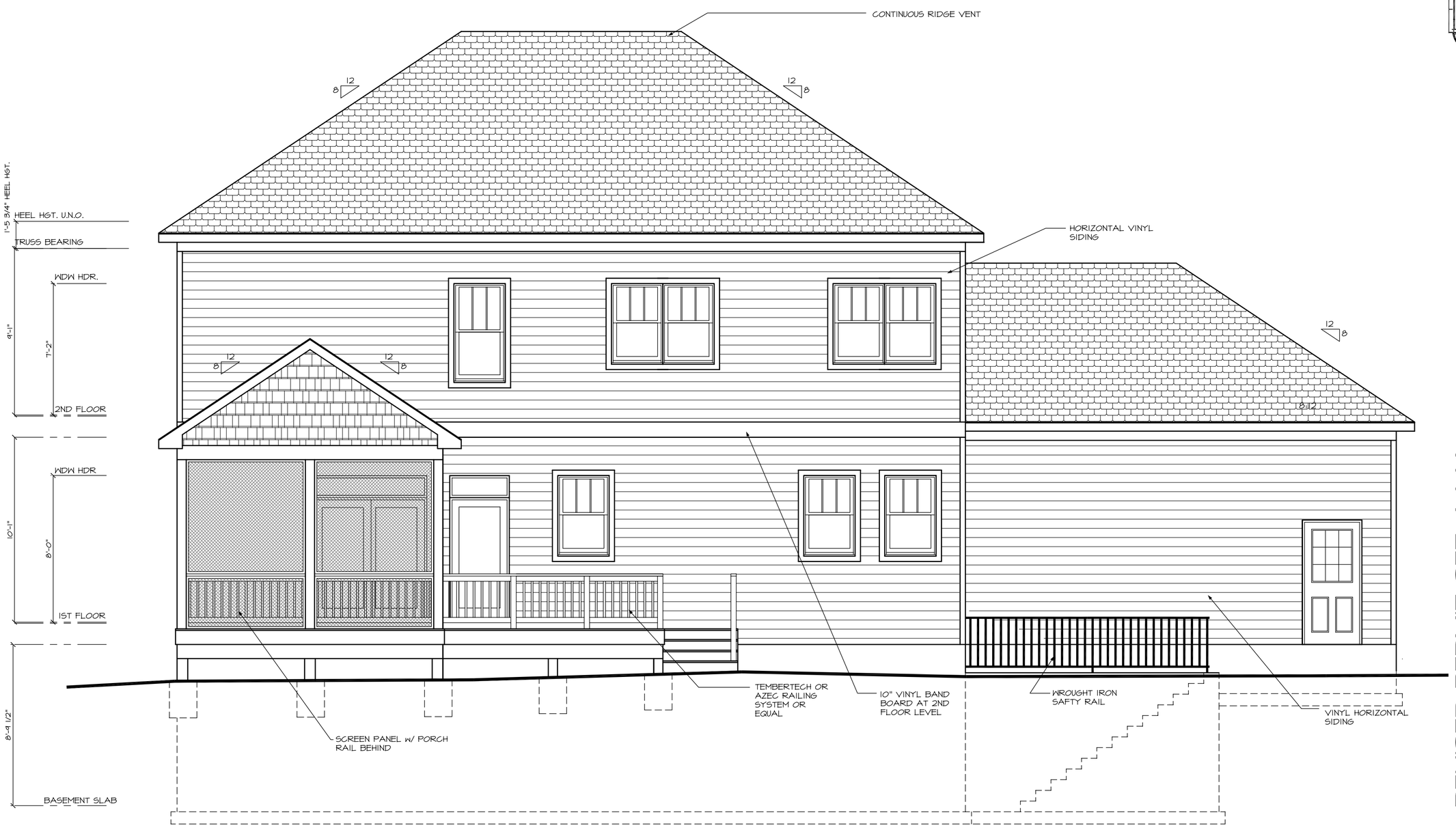

REAR ELEVATION

SCALE: 1/4"=1'-0"

REVISED PERMIT SET 4-1-14

caddworks inc.
RESIDENTIAL DESIGN
332 WEST PATRICK STREET / FREDERICK, MD / 21701
(V) 301.695.9121 (E) DESIGN@CADDWORKS.NET
(F) 301.695.4868 (W) WWW.CADDWORKS.NET

© Copyright Caddworks, Inc. expressly reserves its common law copyright and other property rights in these plans. These are not to be reproduced, changed or copied in any form or manner whatsoever nor are they to be assigned to any third party, without first obtaining the expressed written permission and consent of Caddworks, Inc.

SUBMITTALS

ISSUE DATE	DRAWN BY	REMARKS
11-1-13	DMR	PRELIM.
11-4-13	DMR	REVISED ROOF PLAN
11-12-13	DMR	ADDED BILCO BASEMENT DOORS
12-13-13	DMR	REVISIONS & ELEVATIONS
1-31-14	DMR	UPDATED PLANS
4-1-14	DMR	REVISED PERMIT SET

REAR ELEVATION

PROPOSED HOME FOR:
CAROL SCOTT & JASON STEINHORN
5148 BONNIE ACRES
ELLICOTT CITY, HOWARD COUNTY

SHEET NO.
A-7

PROJ. NO.: 1279

LEFT SIDE ELEVATION

SCALE: 1/4"=1'-0"

REVISED PERMIT SET 4-1-14

caddworks inc.
RESIDENTIAL DESIGN
332 WEST PATRICK STREET / FREDERICK, MD / 21701
(V) 301.695.9121 (E) DESIGN@CADDWORKS.NET
(F) 301.695.4868 (W) WWW.CADDWORKS.NET

© Copyright Caddworks, Inc. expressly reserves its common law copyright and other property rights in these plans. These are not to be reproduced, changed or copied in any form or manner whatsoever, nor are they to be assigned to any third party, without first obtaining the expressed written permission and consent of Caddworks, Inc.

SUBMITTALS

ISSUE DATE	DRAWN BY	REMARKS
11-1-13	DMR	PRELIM.
11-4-13	DMR	REVISED ROOF PLAN
11-12-13	DMR	ADDED BILCO BASEMENT DOORS
12-31-13	DMR	REVISIONS & ELEVATIONS
1-31-14	DMR	UPDATED PLANS
4-1-14	DMR	REVISED PERMIT SET

LEFT SIDE ELEVATION

PROPOSED HOME FOR:

CAROL SCOTT & JASON STEINHORN

5148 BONNIE ACRES
ELLICOTT CITY, HOWARD COUNTY

SHEET NO.
A-8

PROJ. NO.: 1279

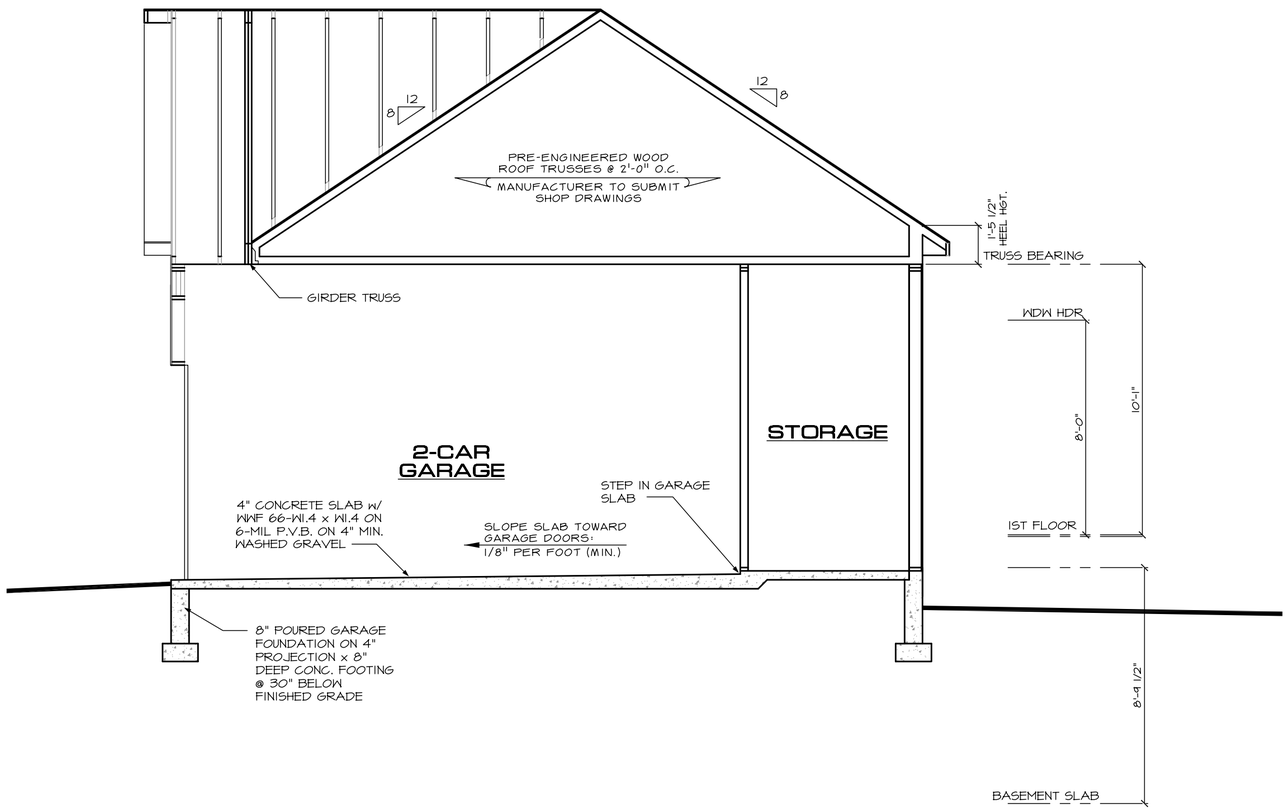

SECTION A

SCALE: 1/4"=1'-0"

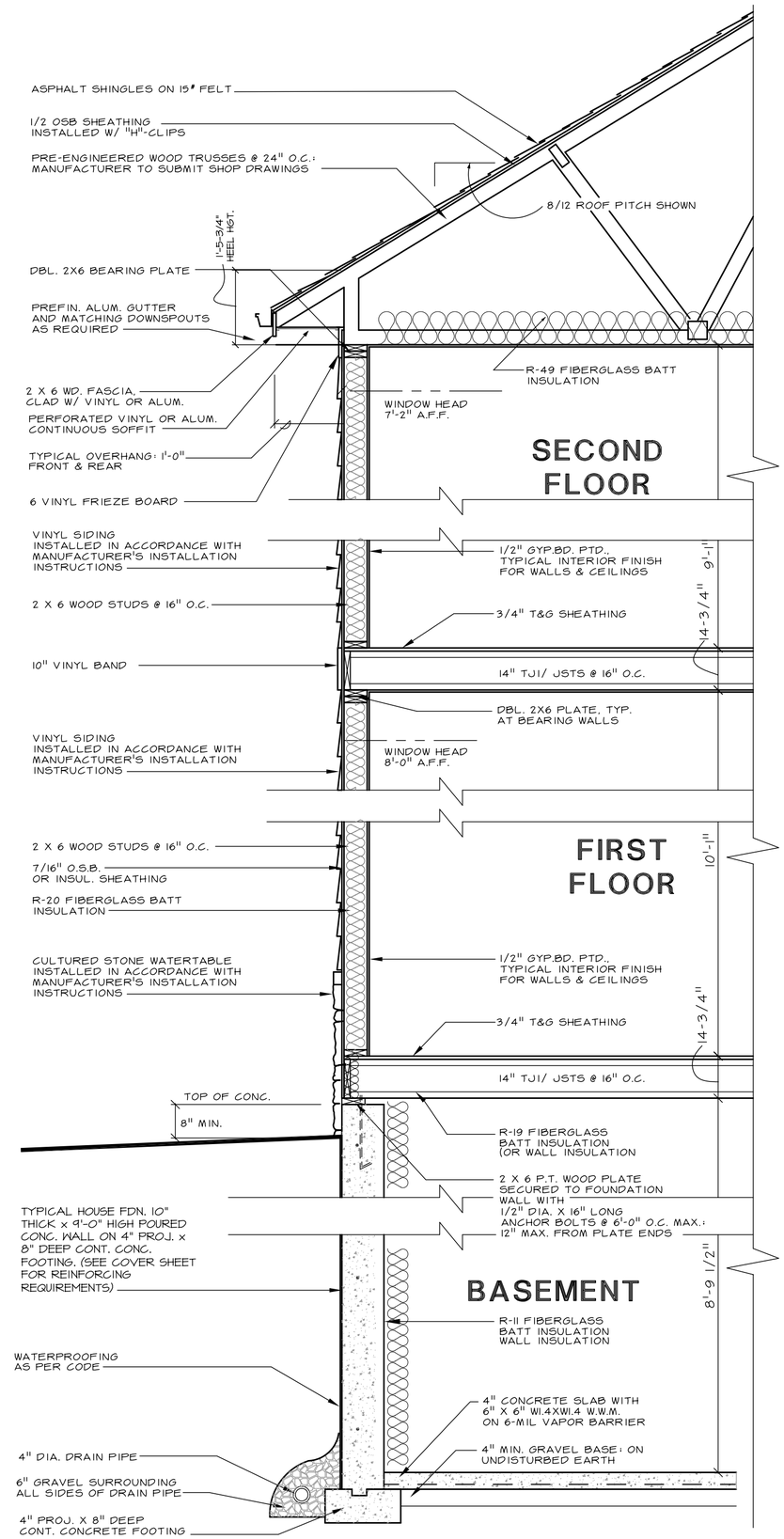

TYP. WALL SECTION

SCALE: 1/2"=1'-0"

REVISED PERMIT SET 4-1-14

caddworks inc.
RESIDENTIAL DESIGN
332 WEST PATRICK STREET / FREDERICK, MD / 21701
(V) 301.695.9121 (E) DESIGN@CADDWORKS.NET
(F) 301.695.4868 (W) WWW.CADDWORKS.NET

© Copyright Caddworks, Inc. expressly reserves its common law copyright and other property rights in these plans. These are not to be reproduced, changed or copied in any form or manner whatsoever, nor are they to be assigned to any third party, without first obtaining the expressed written permission and consent of Caddworks, Inc.

SUBMITTALS

ISSUE DATE	DRAWN BY	REMARKS
11-1-13	DMR	PRELIM.
11-4-13	DMR	REVISED ROOF PLAN
11-12-13	DMR	ADDED BILCO BASMENT DOORS
12-13-13	DMR	REVISIONS & ELEVATIONS
1-31-14	DMR	UPDATED PLANS
4-1-14	DMR	REVISED PERMIT SET

TYP. WALL SECTION & SECTION A

PROPOSED HOME FOR:

CAROL SCOTT & JASON STEINHORN

5148 BONNIE ACRES

ELLICOTT CITY, HOWARD COUNTY

SHEET NO.

A-9

PROJ. NO.: 1279

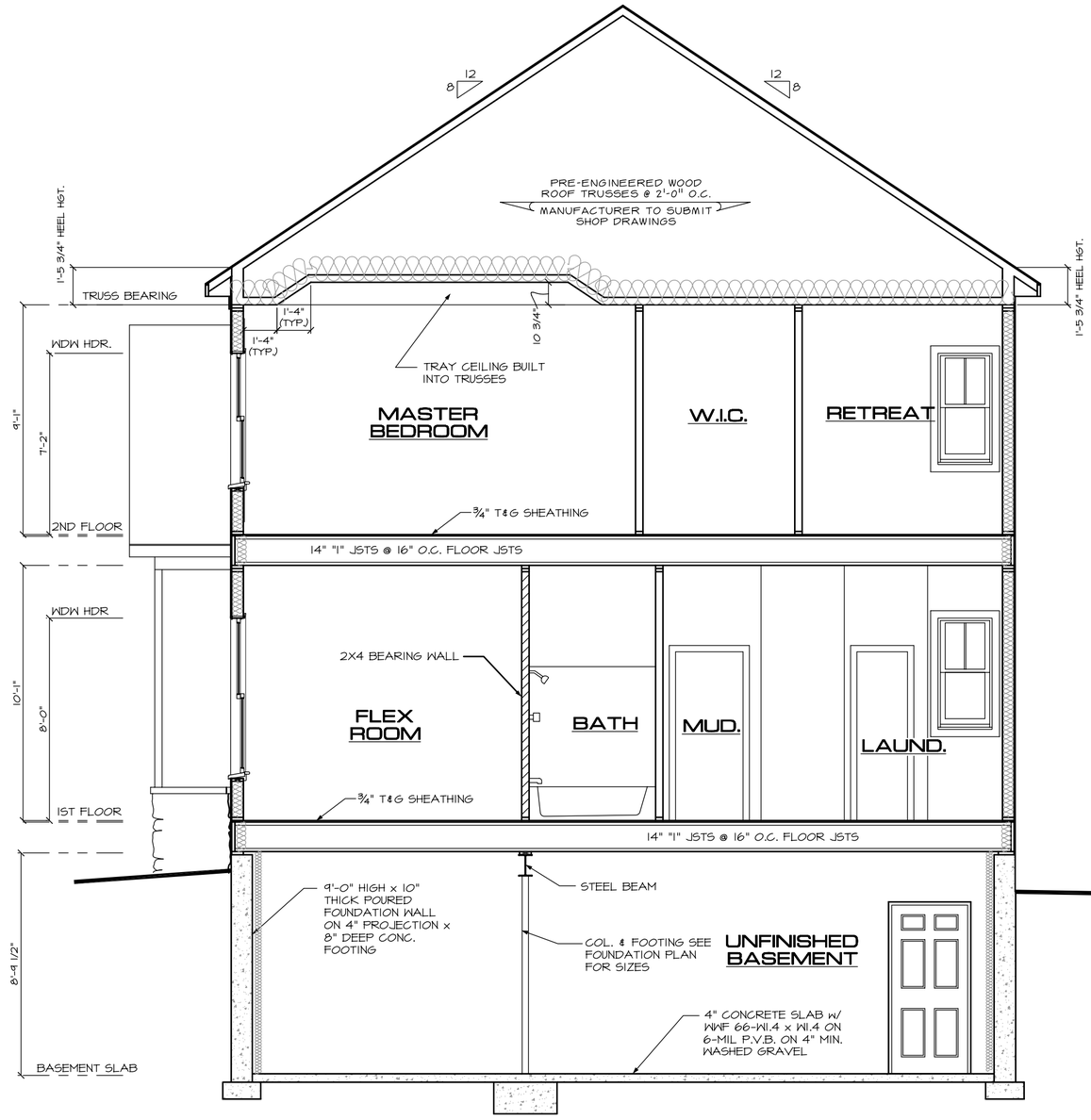

SECTION B

SCALE: 1/4"=1'-0"

REVISED PERMIT SET 4-1-14

caddworks inc.
RESIDENTIAL DESIGN
332 WEST PATRICK STREET / FREDERICK, MD / 21701
(V) 301.695.9121 (E) DESIGN@CADDWORKS.NET
(F) 301.695.4868 (W) WWW.CADDWORKS.NET

© Copyright Caddworks, Inc. expressly reserves its common law copyright and other property rights in these plans. These are not to be reproduced, changed or copied in any form or manner whatsoever, nor are they to be assigned to any third party, without first obtaining the expressed written permission and consent of Caddworks, Inc.

SUBMITTALS

ISSUE DATE	DRAWN BY	REMARKS
11-1-13	DMR	PRELIM.
11-4-13	DMR	REVISED ROOF PLAN
11-12-13	DMR	ADDED BULCO BASEMENT DOORS
12-13-13	DMR	REVISIONS & ELEVATIONS
1-31-14	DMR	UPDATED PLANS
4-1-14	DMR	REVISED PERMIT SET

SECTION @ B

PROPOSED HOME FOR:
CAROL SCOTT & JASON STEINHORN
5148 BONNIE ACRES
ELLICOTT CITY, HOWARD COUNTY

SHEET NO.
A-10

PROJ. NO.: 1279

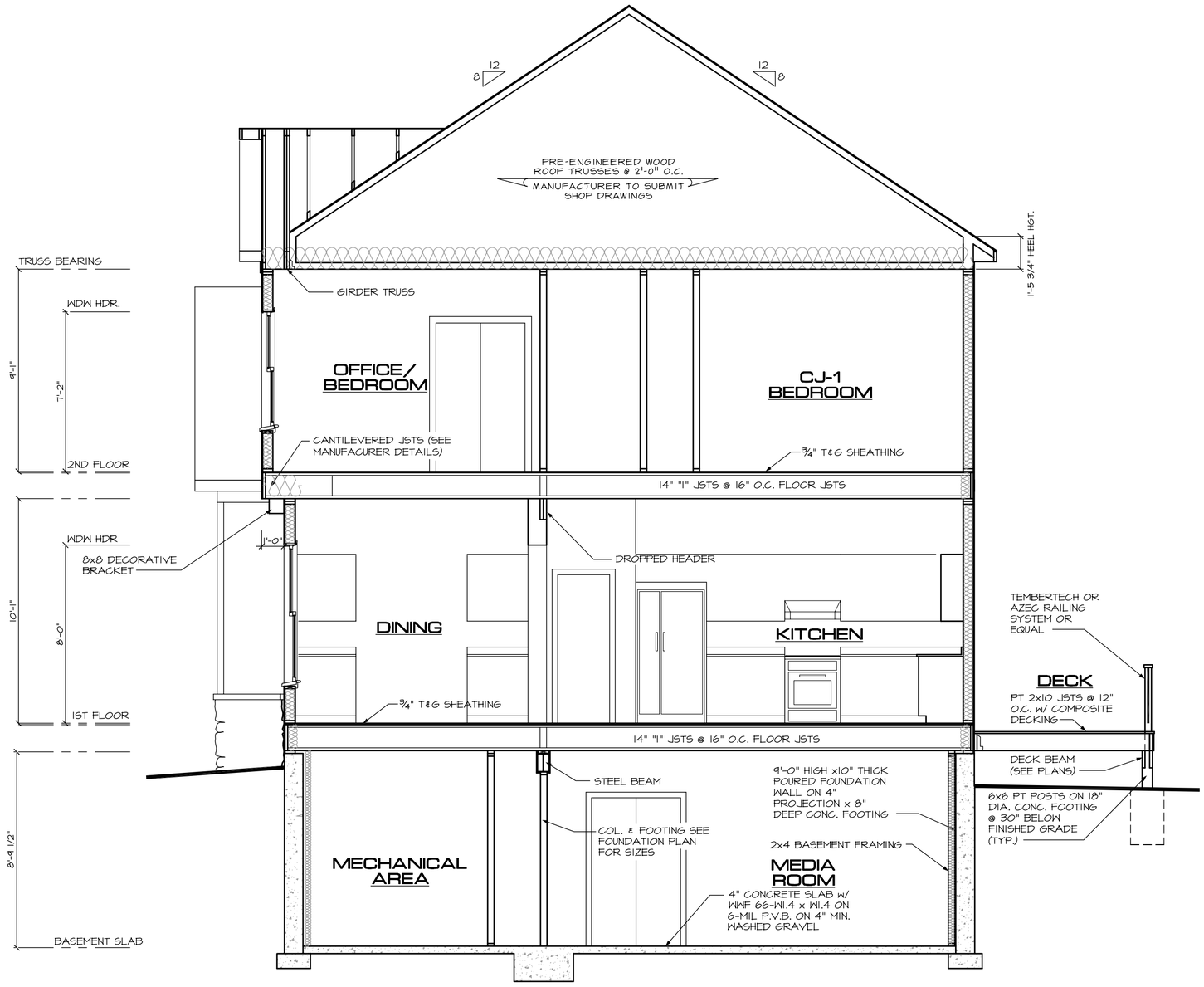

SECTION C

SCALE: 1/4"=1'-0"

REVISED PERMIT SET 4-1-14

caddworks inc.
RESIDENTIAL DESIGN
332 WEST PATRICK STREET / FREDERICK, MD / 21701
(V) 301.695.9121 (E) DESIGN@CADDWORKS.NET
(F) 301.695.4868 (W) WWW.CADDWORKS.NET

© Copyright Caddworks, Inc. expressly reserves its common law copyright and other property rights in these plans. These are not to be reproduced, changed or copied in any form or manner whatsoever, nor are they to be assigned to any third party, without first obtaining the expressed written permission and consent of Caddworks, Inc.

SUBMITTALS

ISSUE DATE	DRAWN BY	REMARKS
11-1-13	DMR	PRELIM.
11-4-13	DMR	REVISED ROOF PLAN
11-12-13	DMR	ADDED BILCO BASMENT DOORS
12-13-13	DMR	REVISIONS & ELEVATIONS
1-31-14	DMR	UPDATED PLANS
4-1-14	DMR	REVISED PERMIT SET

SECTION @ C

PROPOSED HOME FOR:
CAROL SCOTT & JASON STEINHORN
5148 BONNIE ACRES
ELLICOTT CITY, HOWARD COUNTY

SHEET NO.
A-11

PROJ. NO.: 1279

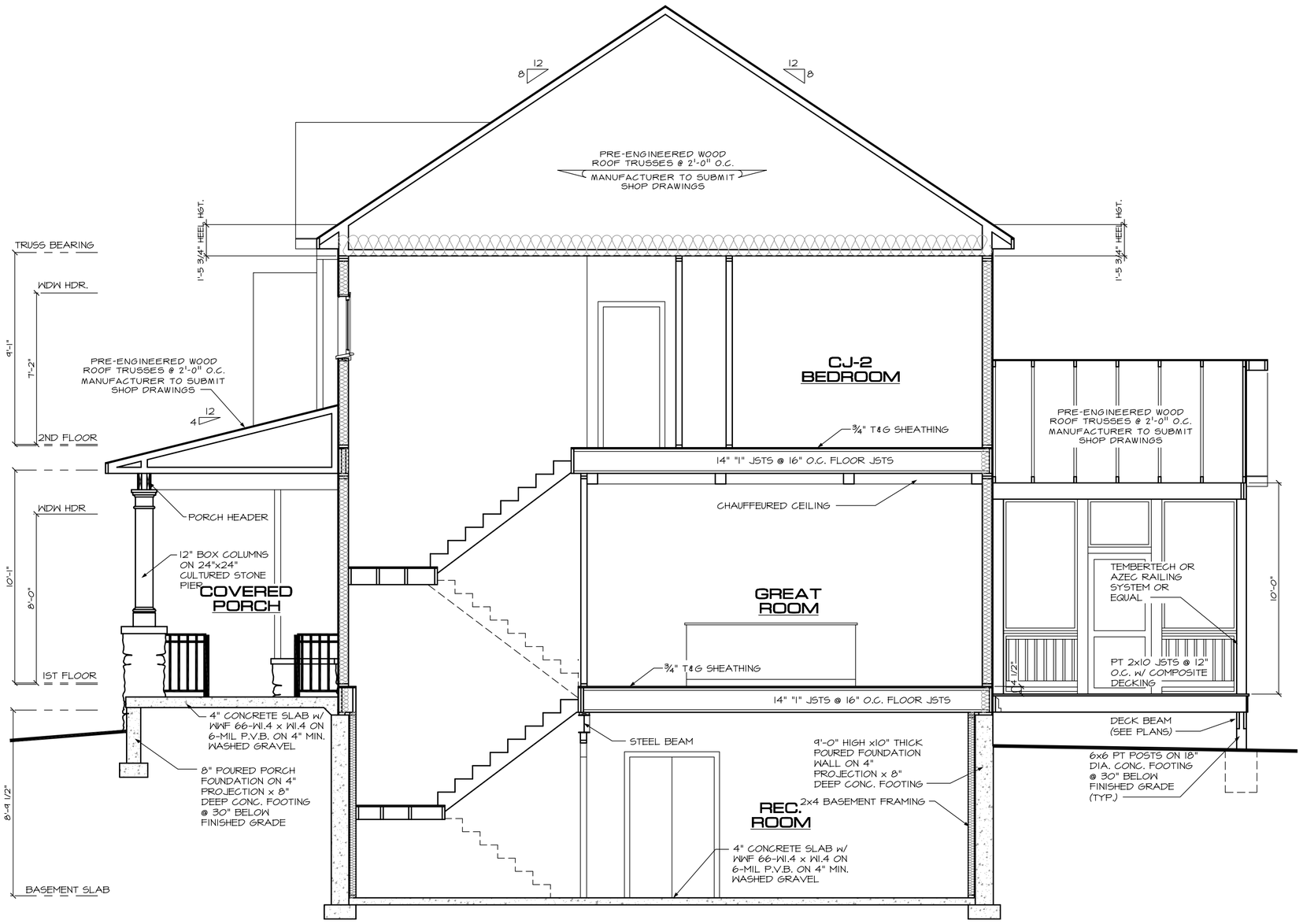

SECTION D

SCALE: 1/4"=1'-0"

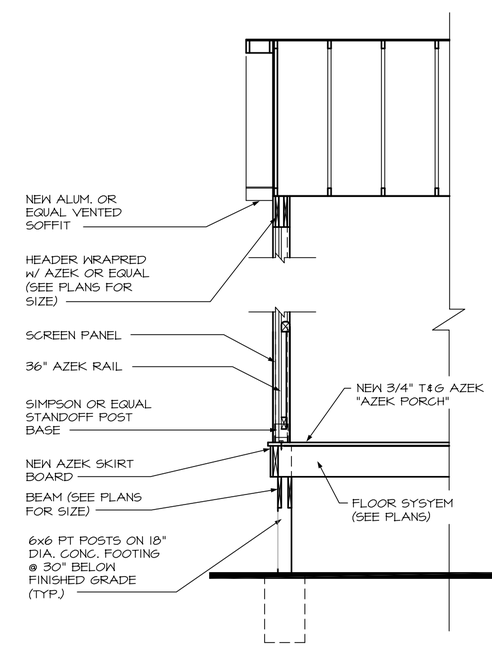

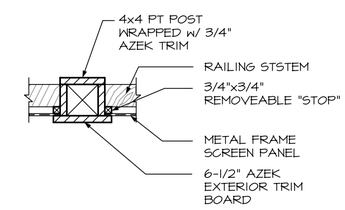

SCREEN PORCH SECTIONS

SCALE: 1/4"=1'-0"

REVISED PERMIT SET 4-1-14

caddworks inc.
RESIDENTIAL DESIGN
332 WEST PATRICK STREET / FREDERICK, MD / 21701
(V) 301.695.9121 (E) DESIGN@CADDWORKS.NET
(F) 301.695.4868 (W) WWW.CADDWORKS.NET

© Copyright Caddworks, Inc. expressly reserves its common law copyright and other property rights in these plans. These are not to be reproduced, changed or copied in any form or manner whatsoever, nor are they to be assigned to any third party, without first obtaining the expressed written permission and consent of Caddworks, Inc.

SUBMITTALS

ISSUE DATE	DRAWN BY	REMARKS
11-1-13	DMR	PRELIM.
11-4-13	DMR	REVISED ROOF PLAN
11-12-13	DMR	ADDED BILCO BASEMENT DOORS
12-13-13	DMR	REVISIONS & ELEVATIONS
1-31-14	DMR	UPDATED PLANS
4-1-14	DMR	REVISED PERMIT SET

SECTION @ D

PROPOSED HOME FOR:
CAROL SCOTT & JASON STEINHORN
5148 BONNIE ACRES
ELLICOTT CITY, HOWARD COUNTY

SHEET NO.
A-12

PROJ. NO.: 1279

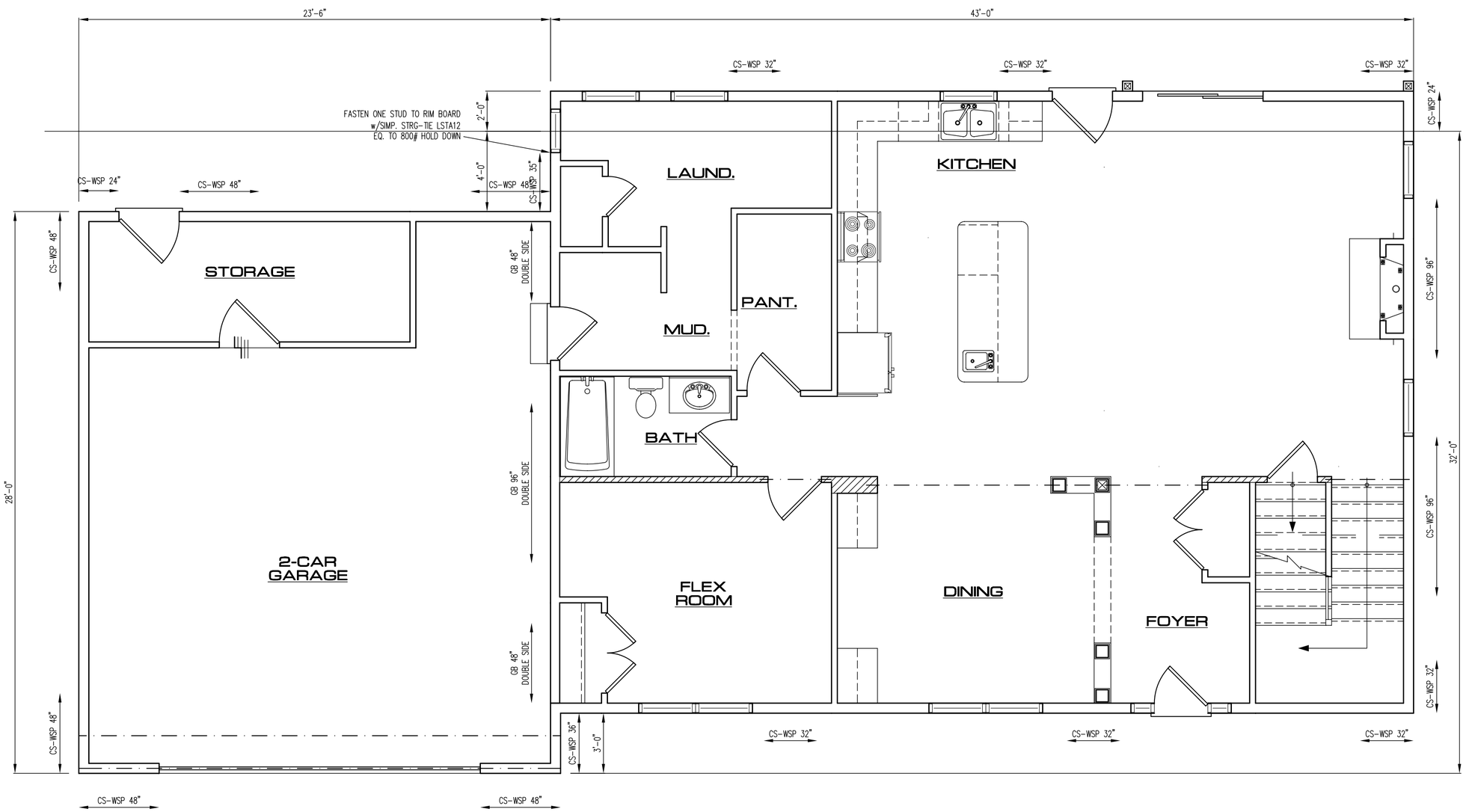

FRAMING CARPENTER NOTE:

SEE DETAIL SHEET FOR FRAMING AND NAILING INSTRUCTIONS REQUIRED AT LOCATIONS LABELED "CS-WSP #" OR "WSP #" ONLY. THERE ARE SPECIAL REQUIREMENTS FOR FASTENING THE SHEATHING TO THE STUDS, FOR FASTENING THE BOTTOM WALL PLATE TO THE RIM BOARD OR JOISTS AND FOR FASTENING THE UPPER RIM BOARD TO THE TOP PLATE. THERE ARE ALSO SPECIAL REQUIREMENTS FOR BLOCKING BETWEEN THE TRUSSES AT THE SAME INDICATED LOCATIONS.

WIND SPEED (MPH)			90		90		90		90		90		90		90		90		90		90		
BRACED WALL LINE			1st front		1st back		1st left		1st mid		1st right		2nd front		2nd back		2nd left		2nd right				
STORY																							
BRACED WALL PANEL METHOD			CS-WSP CS-PF CS-G		CS-WSP CS-PF CS-G		CS-WSP CS-PF CS-G		GB		CS-WSP CS-PF CS-G		CS-WSP CS-PF CS-G		CS-WSP CS-PF CS-G		CS-WSP CS-PF CS-G		CS-WSP CS-PF CS-G				
AVG BWL SPACING (ft)			32		32		23.5		33.25		43		31		31		43		43				
TABULAR REQUIRED (ft)				9.60		9.60		4.02		20.29		12.75		5.10		5.10		6.45		6.45			
ADJUSTMENT	EXPOSURE		B	1.00	B	1.00	B	1.00	B	1.00	B	1.00	B	1.00	B	1.00	B	1.00	B	1.00			
	EAVE-RIDGE HT (ft)		11.50	1.02	11.50	1.02	8.75	0.91	11.50	1.02	11.50	1.02	11.50	1.04	11.50	1.04	11.50	1.04	11.50	1.04			
	WALL HEIGHT (ft)		10.00	1.00	10.00	1.00	12.00	1.10	10.00	1.00	10.00	1.00	9.00	0.95	9.00	0.95	9.00	0.95	9.00	0.95			
	# BWLs		2.00	1.00	2.00	1.00	3.00	1.30	3.00	1.30	3.00	1.30	2.00	1.00	2.00	1.00	2.00	1.00	2.00	1.00			
	OMIT INTERIOR GB		NO	1.00	NO	1.00	YES	1.40	NO	1.00	NO	1.00	NO	1.00	NO	1.00	NO	1.00	NO	1.00			
	ADD PWR BOW HOLD DOWNS		NO	1.00	NO	1.00	NO	1.00	NO	1.00	NO	1.00	NO	1.00	NO	1.00	NO	1.00	NO	1.00			
	METHOD GB FASTENING @ 4" o.c.		NO	1.00	NO	1.00	NO	1.00	NO	1.00	NO	1.00	NO	1.00	NO	1.00	NO	1.00	NO	1.00			
REQUIRED BWP LENGTH (ft)				9.78		9.78		7.30		26.87		16.89		5.03		5.03		6.36		6.36			
ACTUAL BWP	CONTRIBUTING LENGTH	BWP	METHOD	LENGTH (ft)	METHOD	LENGTH (ft)	METHOD	LENGTH (ft)	METHOD	LENGTH (ft)	METHOD	LENGTH (ft)	METHOD	LENGTH (ft)	METHOD	LENGTH (ft)	METHOD	LENGTH (ft)	METHOD	LENGTH (ft)			
		1	CS-WSP	4.00	CS-WSP	4.00	CS-WSP	4.00	CS-WSP	3.00	CS-WSP	8.00	CS-WSP	2.25	CS-WSP	2.25	CS-WSP	2.25	CS-WSP	2.25			
		2	CS-WSP	4.00	CS-WSP	4.00	CS-WSP	4.00	DS - GB	8.00	CS-WSP	2.67	CS-WSP	2.25	CS-WSP	2.25	CS-WSP	2.25	CS-WSP	2.25			
		3	CS-WSP	2.67	CS-WSP	2.67			DS - GB	8.00	CS-WSP	8.00	CS-WSP	2.25	CS-WSP	2.25	CS-WSP	2.25	CS-WSP	2.25			
		4	CS-WSP	2.67	CS-WSP	2.67			CS-WSP	2.92			CS-WSP	2.25	CS-WSP	2.25							
		5	CS-WSP	2.67	CS-WSP	2.67			DS - GB	8.00													
		6																					
		7																					
ACTUAL BWP LENGTH (ft)			16.01		16.01		8.00		29.92		18.67		9.00		9.00		6.75		6.75				
ACTUAL ≥ REQUIRED			YES		YES		YES		YES		YES		YES		YES		YES		YES				
SPACE	BWPs ≤ 20' APART		YES		YES		YES		YES		YES		YES		YES		YES		YES				
# of BWPs	Length of BWL (ft)		66.5		66.5		28		34		31		43		43		31		31				
	BWP 1 ≤ 16'; 2 > 16'		YES		YES		YES		YES		YES		YES		YES		YES		YES				
ENDS	BWP WITHIN 10' OF END		YES	YES	YES	YES	YES	YES	YES	YES	YES	YES	YES	YES	YES	YES	YES	YES	YES	YES			
	CONTINUOUS END CONDITION		1	1	1	1	1	1	1	1	1	1	1	2	2	1	1	2	1	2			
BWL COMPLIANCE PASS-FAIL			PASS		PASS		PASS		PASS		PASS		PASS		PASS		PASS		PASS				

FIRST FLOOR LATERIAL BRACING

SCALE: 1/4"=1'-0"

STRUCTURAL ENGINEERING RESOURCES, LLC
26 NORTH FOURTH STREET
GETTYSBURG, PA 17325
(717) 337-1335
www.SERLLC.us

STATE OF MARYLAND
JEFFREY BEN FERTIGH
No. 24342
PROFESSIONAL ENGINEER

Professional Certification. I hereby certify that these documents were prepared or approved by me, and that I am a duly licensed professional engineer under the laws of the State of Maryland, License No. 24342, Expiration Date: 11-17-2015.

REVISED PERMIT SET 4-1-14

caddworks inc.
RESIDENTIAL DESIGN
332 WEST PATRICK STREET / FREDERICK, MD / 21701
(V) 301.695.9121 (E) DESIGN@CADDWORKS.NET
(F) 301.695.4868 (W) WWW.CADDWORKS.NET

© Copyright Caddworks, Inc. expressly reserves its common law copyright and other property rights in these plans. These are not to be reproduced, changed or copied in any form or manner whatsoever, nor are they to be assigned to any third party, without first obtaining the expressed written permission and consent of Caddworks, Inc.

SUBMITTALS

ISSUE DATE	DRAWN BY	REMARKS
11-1-13	DMR	PRELIM.
11-4-13	DMR	REVISED ROOF PLAN
11-12-13	DMR	ADDED BILCO BASEMENT DOORS
12-13-13	DMR	REVISIONS & ELEVATIONS
1-31-14	DMR	UPDATED PLANS
4-1-14	DMR	REVISED PERMIT SET

1ST FLOOR LATERIAL BRACING

PROPOSED HOME FOR:

CAROL SCOTT & JASON STEINHORN

5148 BONNIE ACRES
ELLICOTT CITY, HOWARD COUNTY

SHEET NO.
L-1

PROJ. NO.: 1279

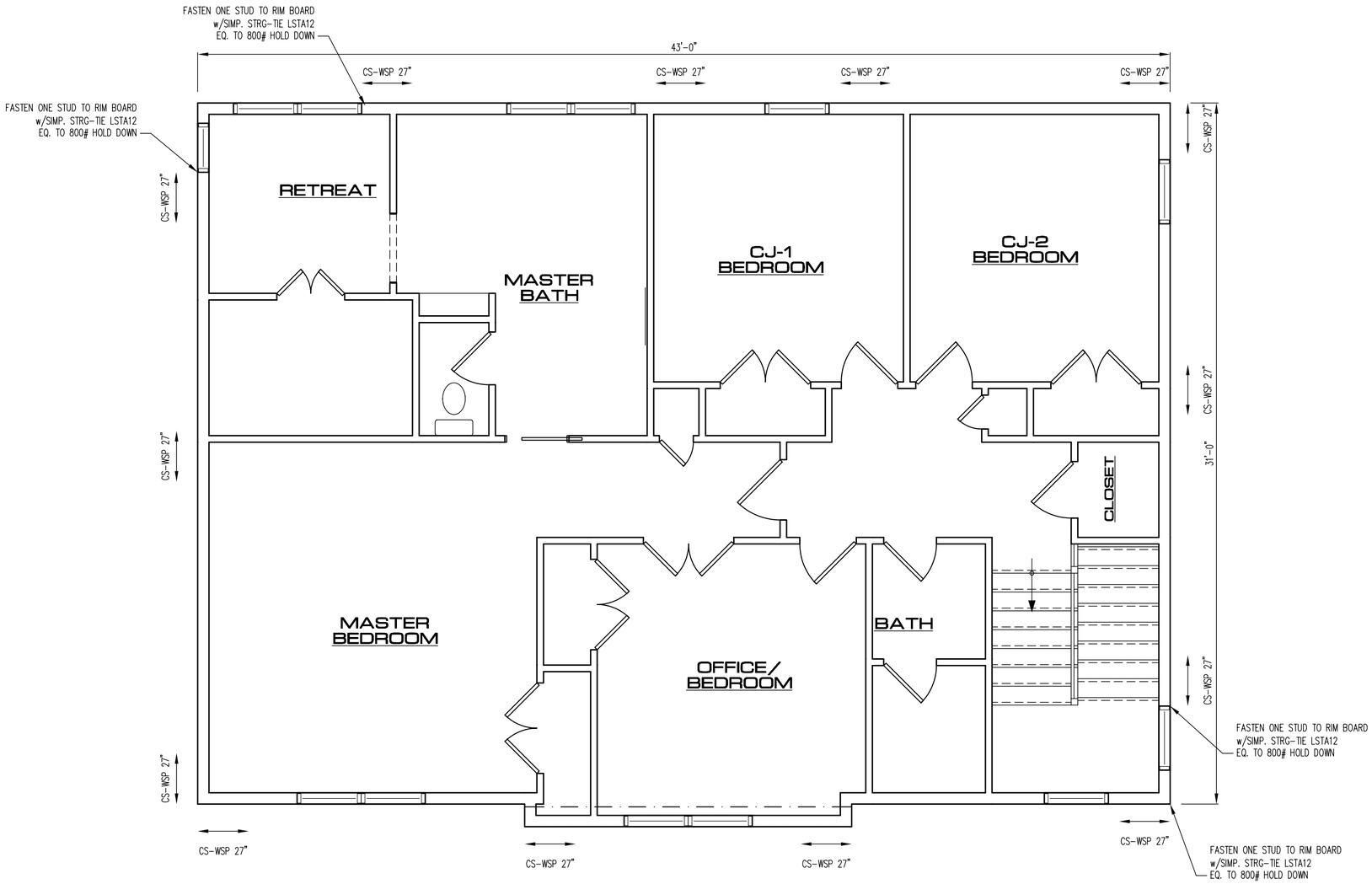

SECOND FLOOR LATERIAL BRACING

SCALE: 1/4"=1'-0"

STRUCTURAL ENGINEERING RESOURCES, LLC
26 NORTH FOURTH STREET
GETTYSBURG, PA 17325
(717) 337-1335
www.SERLLC.us

STATE OF MARYLAND
JEFFREY BEN FERTIG
No. 24342
PROFESSIONAL ENGINEER

Professional Certification. I hereby certify that these documents were prepared or approved by me, and that I am a duly licensed professional engineer under the laws of the State of Maryland, License No. 24342, Expiration Date: 11-17-2015.

REVISED PERMIT SET 4-1-14

caddworks inc.
RESIDENTIAL DESIGN
332 WEST PATRICK STREET / FREDERICK, MD / 21701
(V) 301.695.9121 (E) DESIGN@CADDWORKS.NET
(F) 301.695.4868 (W) WWW.CADDWORKS.NET

© Copyright Caddworks, Inc. expressly reserves its common law copyright and other property rights in these plans. These are not to be reproduced, changed or copied in any form or manner whatsoever, nor are they to be assigned to any third party, without first obtaining the expressed written permission and consent of Caddworks, Inc.

SUBMITTALS

ISSUE DATE	DRAWN BY	REMARKS
11-1-13	DMR	PRELIM.
11-4-13	DMR	REVISED ROOF PLAN
11-12-13	DMR	ADDED BILCO BASEMENT DOORS
12-13-13	DMR	REVISIONS & ELEVATIONS
1-31-14	DMR	UPDATED PLANS
4-1-14	DMR	REVISED PERMIT SET

2ND FLOOR LATERIAL BRACING

PROPOSED HOME FOR:

CAROL SCOTT & JASON STEINHORN

5148 BONNIE ACRES
ELLICOTT CITY, HOWARD COUNTY

SHEET NO.
L-2

PROJ. NO.: 1279

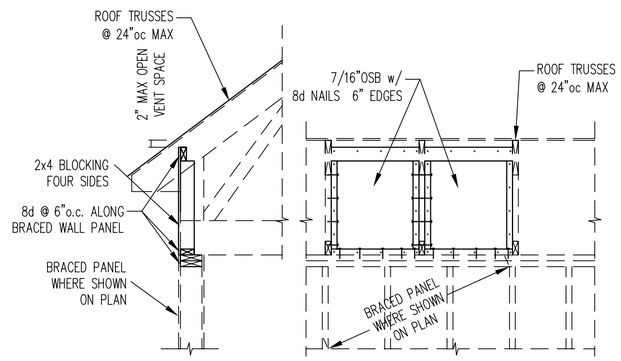

BRACED WALL PANEL FASTENING AT RAISED HEAL TRUSS DETAILS

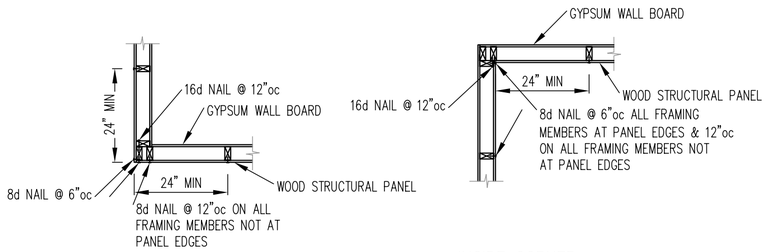

OUTSIDE CORNER

INSIDE CORNER

TYPICAL EXTERIOR CORNER DETAIL FOR CONTINUOUS SHEATHING – CS-WSP

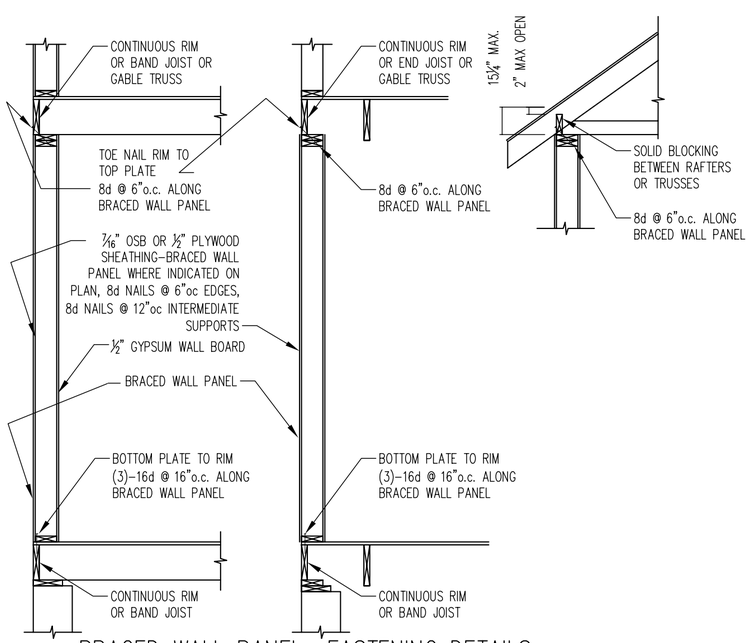

BRACED WALL PANEL FASTENING DETAILS

DETAIL APPLIES ONLY WHERE INDICATED ON PLAN "WSP #" OR "CS-WSP #"

LATERAL BRACING NOTES:
BRACING MEETS THE REQUIREMENTS OF 2012 IRC R602.10 AND APPROPRIATE ENGINEERING PRINCIPLES AS SIGNED AND SEALED BY THE PROFESSIONAL ENGINEER

7/16" OSB OR ½" PLYWOOD WOOD STRUCTURAL PANELS (CS-WSP) MUST BE APPLIED TO ALL EXTERIOR SHEATHABLE SURFACES INCLUDING GABLE END WALLS & ABOVE & BELOW ALL OPENINGS. THE SHEATHING IS TO BE FASTENED w/ 8d NAILS AT 6"oc @ EDGES & @ 12"oc AT ALL INTERMEDIATE SUPPORTS.

INTERIOR GYPSUM BOARD (GB) BRACED WALLS WHERE INDICATED TO BE FASTENED AT ALL EDGES w/ SCREWS OR NAILS @ 7"oc.

BRACED PANELS "WSP #" or "CS-WSP #" INDICATES THE WIDTH IN INCHES AND LOCATION OF PANELS TO MEET CODE, THE SHEATHING & NAIL PATTERN IS THE SAME HERE AS ACROSS THE ENTIRE HOME, HOWEVER THE TOP & BOTTOM AT THIS LOCATION MUST BE FASTENED PER THE WSP FASTENING DETAILS.

BRACED PANELS "GB #" INDICATES THE WIDTH IN INCHES AND LOCATION OF GYPSUM BOARD PANELS TO MEET CODE, THE BOARD FASTENING, FASTENING AT THE TOP & BOTTOM & ADDITIONAL FLOOR & ROOF BLOCKING AT THIS LOCATION MUST BE PER THE GB FASTENING DETAILS.

BRACED PANEL "PF #" INDICATED A PORTAL FRAME & REQUIRE SPECIAL ATTACHMENT OF THE HEADER. SEE THE CS-PF PORTAL FRAME DETAIL.

EXTERIOR WALL CORNERS, INSIDE & OUTSIDE, MUST BE CONSTRUCTED PER TYPICAL DETAILS.

BWL – INDICATES BRACED WALL LINE

STRAPS, HANGERS, & ANCHORS INDICATED ARE TO BE SIMPSON STRONG-TIE OR EQUAL.

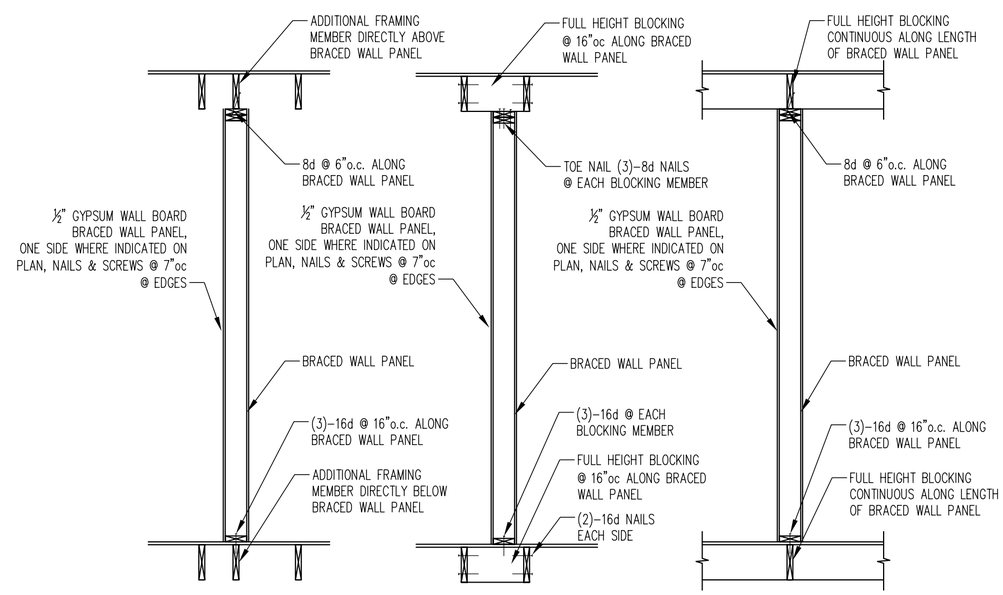

GB FASTENING DETAILS

DETAIL APPLIES ONLY WHERE INDICATED ON PLAN "GB #"

LATERIAL BRACE DETAILS

SCALE: 1/4"=1'-0"

STRUCTURAL ENGINEERING RESOURCES, LLC
26 NORTH FOURTH STREET
GETTYSBURG, PA 17325
(717) 337-1335
www.SERLLC.us

STATE OF MARYLAND
JEFFREY BEN FERTIG
No. 24342
PROFESSIONAL ENGINEER

Professional Certification. I hereby certify that these documents were prepared or approved by me, and that I am a duly licensed professional engineer under the laws of the State of Maryland, License No. 24342, Expiration Date: 11-17-2015.

REVISED PERMIT SET 4-1-14

caddworks inc.
RESIDENTIAL DESIGN
332 WEST PATRICK STREET / FREDERICK, MD / 21701
(V) 301.695.9121 (E) DESIGN@CADDWORKS.NET
(F) 301.695.4868 (W) WWW.CADDWORKS.NET

© Copyright Caddworks, Inc. expressly reserves its common law copyright and other property rights in these plans. These are not to be reproduced, changed or copied in any form or manner whatsoever, nor are they to be assigned to any third party, without first obtaining the expressed written permission and consent of Caddworks, Inc.

SUBMITTALS

ISSUE DATE	DRAWN BY	REMARKS
11-1-13	DMR	PRELIM.
11-4-13	DMR	REVISED ROOF PLAN
11-12-13	DMR	ADDED BILCO BASEMENT DOORS
12-13-13	DMR	REVISIONS & ELEVATIONS
1-31-14	DMR	UPDATED PLANS
4-1-14	DMR	REVISED PERMIT SET

LATERIAL BRACE DETAILS

PROPOSED HOME FOR:
CAROL SCOTT & JASON STEINHORN
5148 BONNIE ACRES
ELLICOTT CITY, HOWARD COUNTY

SHEET NO.
L-3

PROJ. NO.: 1279